Feeding Concepts
15235 Herriman Blvd.
Noblesville IN, 46060
(317)773-2040

Bonduelle Dressing Cup Feeder Manual
Job #FC-19-16199-4

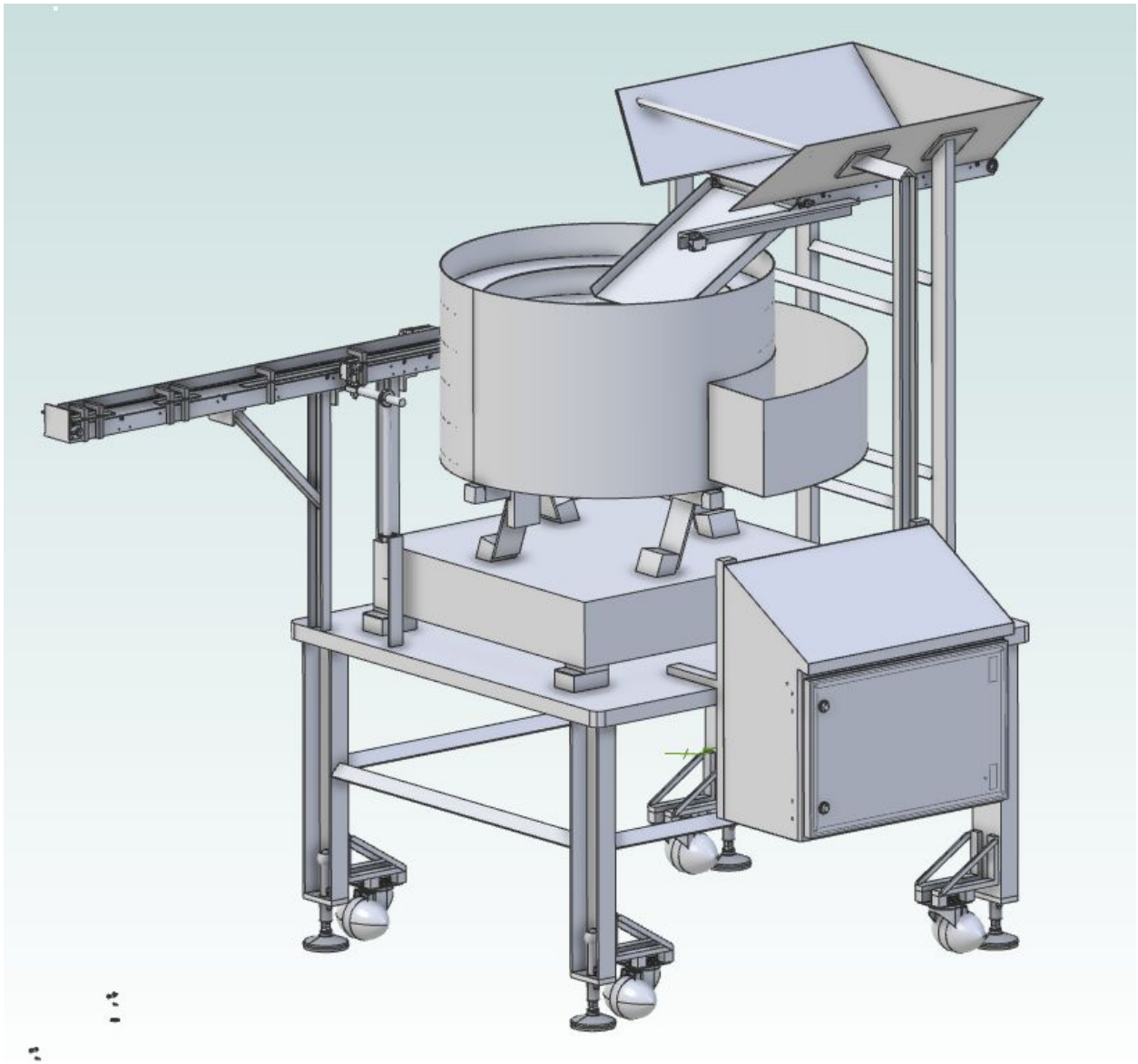

Table of Contents

Machine Installation Instructions.....PG. 3

Machine Start-up/Operation Instructions.....PG. 4

- Timer Adjustment.....PG. 5
- System Specifications.....PG. 5

Sanitation Instruction.....PG. 6

Recommended Spare Parts List.....PG. 7

Drawings.....PG. 8

- Electrical Schematic.....PG. 8
- Control Components.....PG. 9
- Layout Drawing.....PG. 10
- Standard Parts List.....PG. 11

System Specifications

Machine Installation Instructions

1.) Roll feeder into operating location
2.) Level feeder with leveling feet below the frame
3.) Ensure weight is evenly distributed on all pads
4.) Connect FIRM Supplied Hubbell 10-Pin Plug to Feeding Concepts Hubbel Receptacle on side of Control Enclosure
5.) Supply 120VAC (50/60Hz) to Terminals 1 (Blk) and Terminal 2 (Wht)
    a.) Refer to Electrical Schematic
6.) Ensure LED Buttons are properly illuminated, all control components have power, and all components are functioning correctly.

Machine Startup/Operating Instructions

1.) Ensure system has power Throughout and Load belt hopper with dressing cups/
2.) Enable System using the 3 Green Illuminated Buttons on the door of the enclosure.
3.) Allow a minute for the bowl to feed parts throughout the system
4.) Ensure there is no excessive wrattle, banging, etc. Also, verify that the conveyors are working properly.
5.) Observe system as it begins to feed (system may take up to 15 minutes to warm up in the cold environment) and make sure Bowl track and tooling is free of any debris that may cause jams.
6.) Allow Conveyor to become fully supplied with parts, and that the bowl turns off when high level track switch is made
7.) Ensure LED Stacklight is properly Illuminated
    a.) Red - Machine has a malfunction (Jam sensor has not detected parts passing into inline track, a Jam must be cleared)
    b.) Orange/Amber - Hopper Level Low (Part present sensor in hopper detects no parts and the hopper needs to be filed)
    c.) Green - System is operating properly and needs no assistance

Timer Adjustment

Timer 1 - Hopper Low (Set time to determine how long it takes for stacklight to turn orange once hopper low level switch stops detecting forks) Factory Setting: 10 Seconds

Timer 2 - Bowl Level (Set time to determine how long the hopper conveyor takes to turn on once the bowl level sensor stops detecting forks) Factory Setting:

Timer 3 - Full Track (Set time to determine how long high level track switch must be made until the bowl turns off)

Timer 4 - Jam Detected (Set time to determine how long the jam sensor must go without detecting a fork before the stack light turns red to alert operator) Factory Setting: 15 Seconds

System Specifications

Voltage: 120VAC 50/60Hz

Compressed Air: 60PSI

System settings when tested at Feeding Concepts at 100 parts per minute

Bowl Feeder: (73% but undersprung, will stiffen and gain more power in cold room)

Hopper: 75%

Conveyor: 2000%

Sanitation Instruction

1.) All machine components are watertight and rated for a washdown environment.
    a.) ALL CONNECTERS MUST BE TIGHT FOR WATERTIGHT CONNECTION
    b.) Keyence LRZ Sensors have a small red seal around the base of the connector, the nut of the connector cable must seal against this red O-ring to ensure water tight connection.
2.) All Construction is stainless steel, or Nickel Plated/Steel-It Epoxy Coated Steel.
3.) Avoid Direct High Pressure Spray on sensors, stacklight, and valves to prevent any damage
4.) Do NOT spray system unless control box is closed and sealed
5.) Belt can be removed by following the steps below
    a.) Disconnect low level hopper sensor cable
    b.) Remove hopper bin by taking out the 4 bolts on each side of the conveyor
    c.) Loosen the 2 pulley tensioner bolts
    d.) Remove 4 bolts holding the conveyor to frame on one side
    e.) Loosen the other 4 bolts on the other side of the conveyor
    f.) Lift the conveyor and slide the belt out the side

Recommended Spare Parts List

1.) Vibratory Feeders are robust and do not require many parts to keep in stock

2.) It is recommended that you keep the following parts in stock to prevent down-time if a part failure occurs (Refer to the Standard Parts lists on PG. 10)

- (2) E-0391 Electroless Nickel Plated Drive Unit Coil
- (3-4) Drive Unit Springs
- (2) Keyence LR-ZH500CP
- (2) Keyence LR-ZB250CP
- (1) Rodix FC-200 Feeder Control
    - Contact Rodix Control for a full parts replacement kit.

Dressing Cup Outfeed Conveyor

a.) (1) 3" Univ. HB Anodize Idler Pulley Assembly. w/ ALL Stainless (SP 1 -3 Replacement)
    - Includes: HB Pulley, Stainless Bearings, Stainless Bearing Adaptors, Stainless Tension Washers and Stainless Screws

b.) (1) Belt: U2 style, fully sealed (top, bottom and sides) white 1 urethane (Low friction surface, superior cut and abrasion resistance and is impervious to non chlorinated cutting fluids) SPECIAL ORDER. Please allow 6 business days to ship.

c.) (1) Couplers 40-7247 Buna N Spider, for Flexible Shaft Coupler 1 $6.30 $6.30

d.) (1) 60 Watt IP-66 rated Brushless DC Motor. Please request lead time for multiple quantities. - Oriental Motor OR44VJ

e.) (1) BLE2 Driver (for BLDC Motor) 60 Watt Vari Speed, 100-120 VAC 1 50/60 Hz 1 phase Input. Please request lead time for multiple quantities. - Oriental Motor OMD-060-100-BLE2

f.) (2) 3m (9.9 ft.) Connection Cable (F type connector) Please request lead time for multiple quantities. Oriental Motor CBL-BLM-3M-F

g.) (1) 60 Watt BLDC Gearhead 5:1 Ratio W/ Stainless Steel 5/8" dia. 1 Shaft. Oriental Motor ORS005K6

Dressing Cup Hopper Conveyor

(a) 12" Univ. HB Anodize Idler Pulley Assembly. w/ ALL Stainless (SP 1 -3 Replacement)

(b) 20 Stainless Pulley Bearing Adaptor w/ Shield and Stainless 2 Hardware (for Lite drive and univ. Idler pulleys Except 1")

(c) 21 12" LP HB Anodize Drive Pulley Assembly w/ S/S Bearings. (SP-2 1 &3 Replacement) - Includes: HB Pulley, Side Mount - 5M O/U Drive Shaft(s), Fiber Washers, Stainless Spherical OD Bearings and Set Screw(s) Pulley-LP

(d) (1) Belt: U2 style, fully sealed (top, bottom and sides) white 1 urethane (Low friction surface, superior cut and abrasion resistance and is impervious to non chlorinated cutting fluids) SPECIAL ORDER. Please allow 6 business days to ship.

(e) (2)Couplers 40-7247 Buna N Spider, for Flexible Shaft Coupler

(f) (1) 60 Watt IP-66 rated Brushless DC Motor. Please request lead time for multiple quantities.

(g) 25 BLE2 Driver (for BLDC Motor) 60 Watt Vari Speed, 100-120 VAC 1 50/60 Hz 1 phase Input. Please request lead time for multiple quantities. Oriental Motor OMD-060-100-BLE2

(h) (1) 3m (9.9 ft.) Connection Cable (F type connector) Please request lead time for multiple quantities.

(i) (1) 60 Watt BLDC Gearhead 15:1 Ratio W/ Stainless Steel 5/8" dia. 1 Shaft. Please request lead time.

(j) (1) 60 Watt BLDC Gearhead 5:1 Ratio W/ Stainless Steel 5/8" dia. 1 Shaft. Please request lead time.

Drawings

Dressing Cup Control Electrical Schematic (FCI3988C)

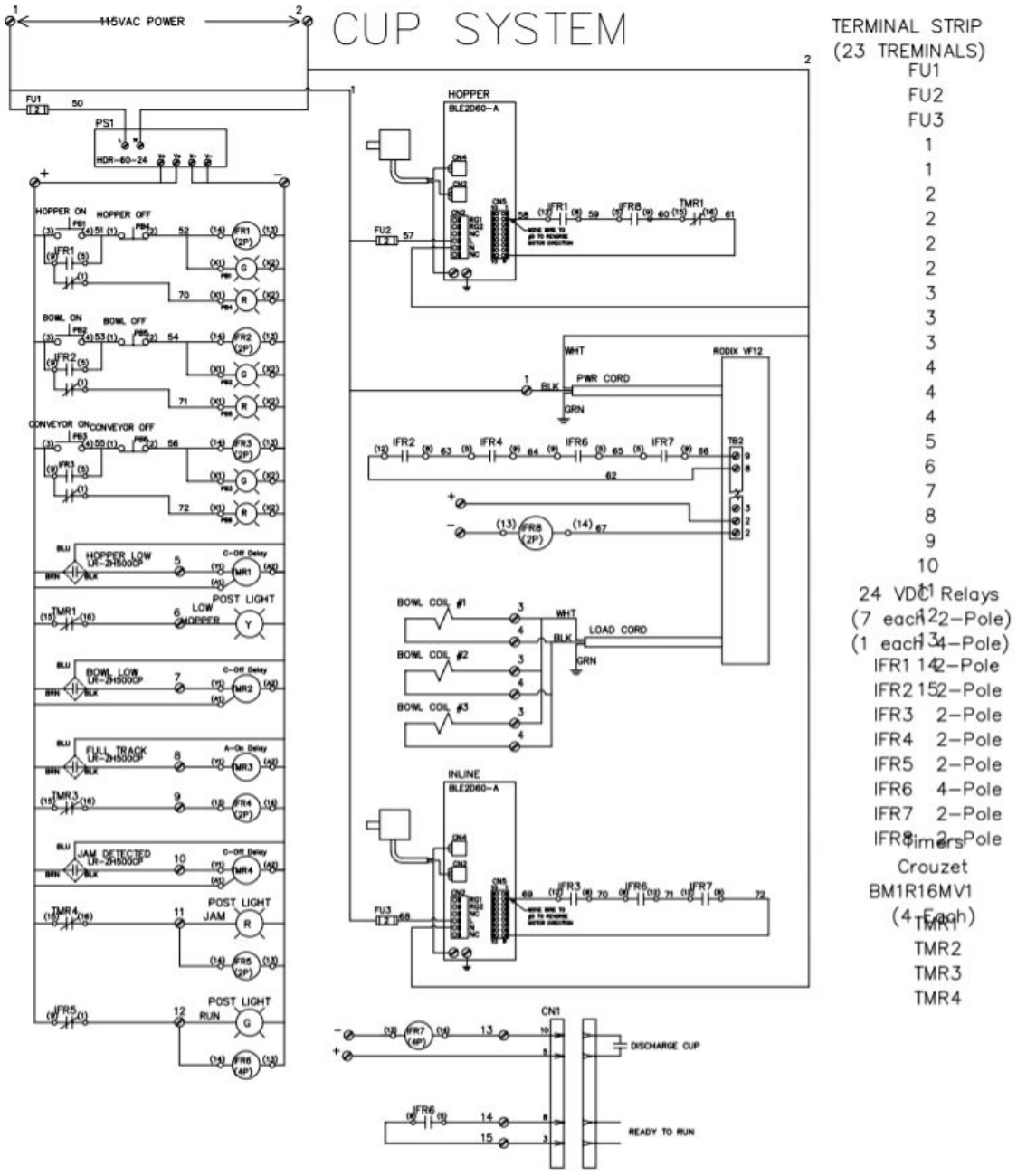

Control Components

Component	Part #	Input Voltage	Current	Output Voltage	Manufacturer.
BLE 2 Motor Driver	BLE2D60-A	120VAC	1.7A	120VAC	Oriental Motor
Rodix FC-200	121-000-2000	120VAC	12A	120VAC	Rodix
24VDC Power Supply	HDR-60-24	120VAC	1.8A	120VAC	Meanwell
(4) Crouznet Timers	BM1R16MV1	24VDC	15mA	16A Max Contact	Crouznet
Banner Stack Light	K50BCLGRYPQ	120VAC	60mA		Banner
Drive Unit Electro Magnetic Coil	E-0391	120VAC			Controlled Automation

Layout Drawing

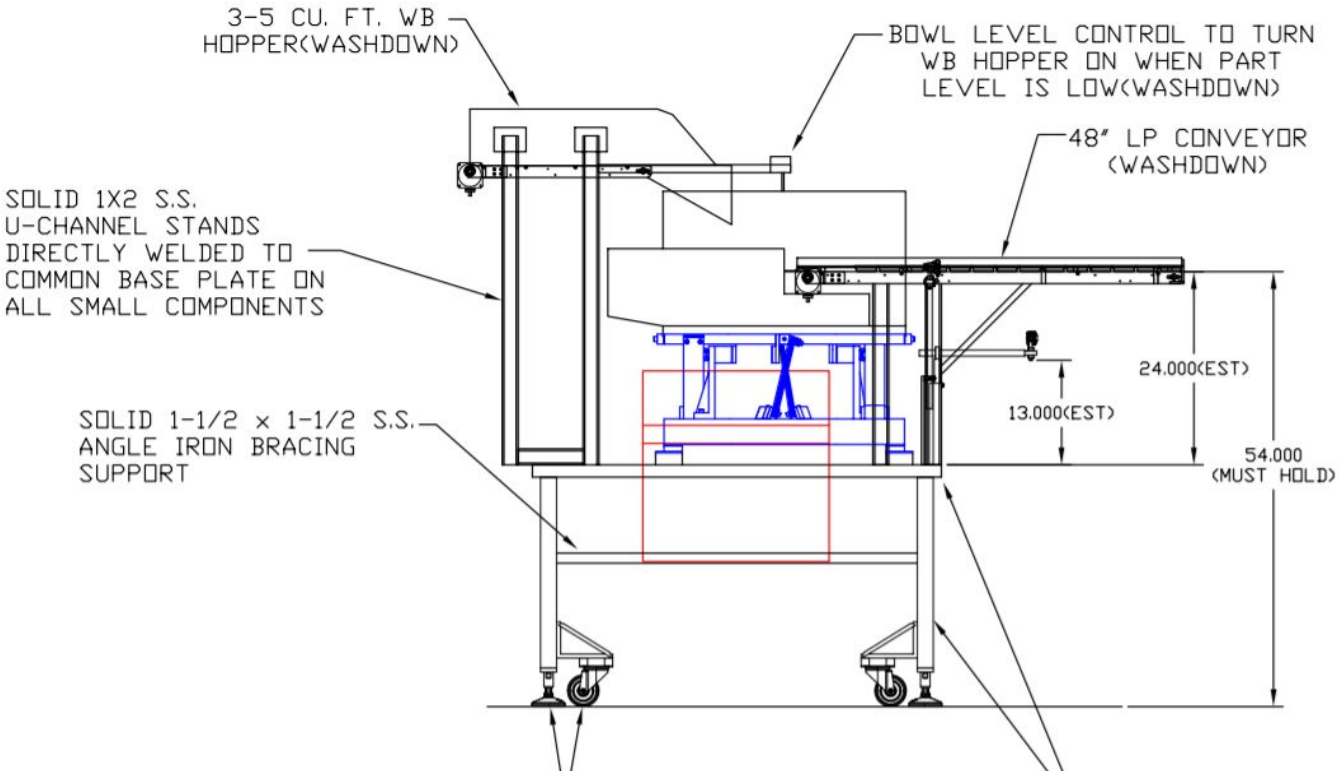

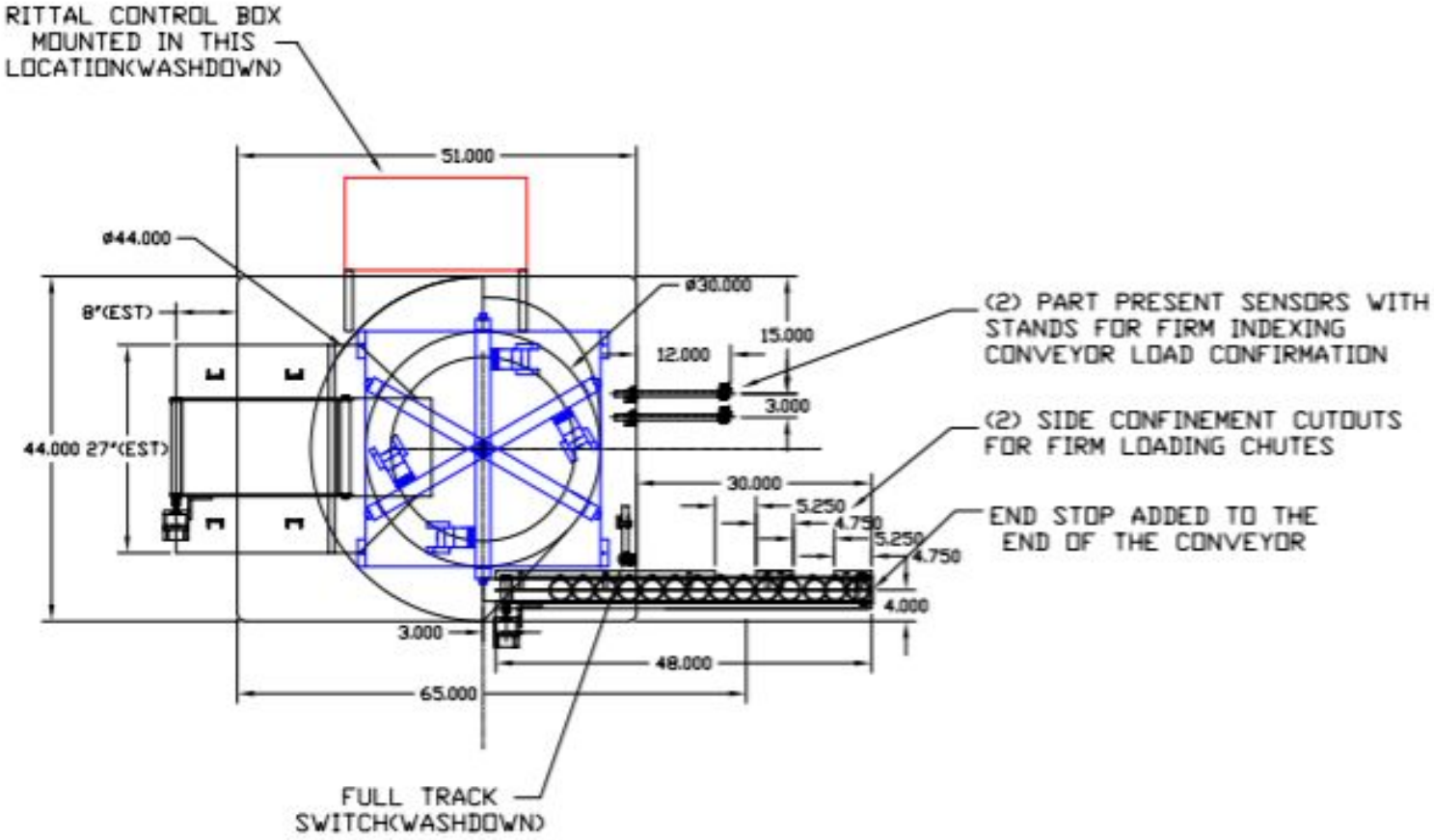

Standard Parts List