Feeding Concepts
15235 Herriman Blvd.
Noblesville IN, 46060
(317)773-2040

Bonduelle Fork Feeder Manual
Job #FC-19-16998-5-CW

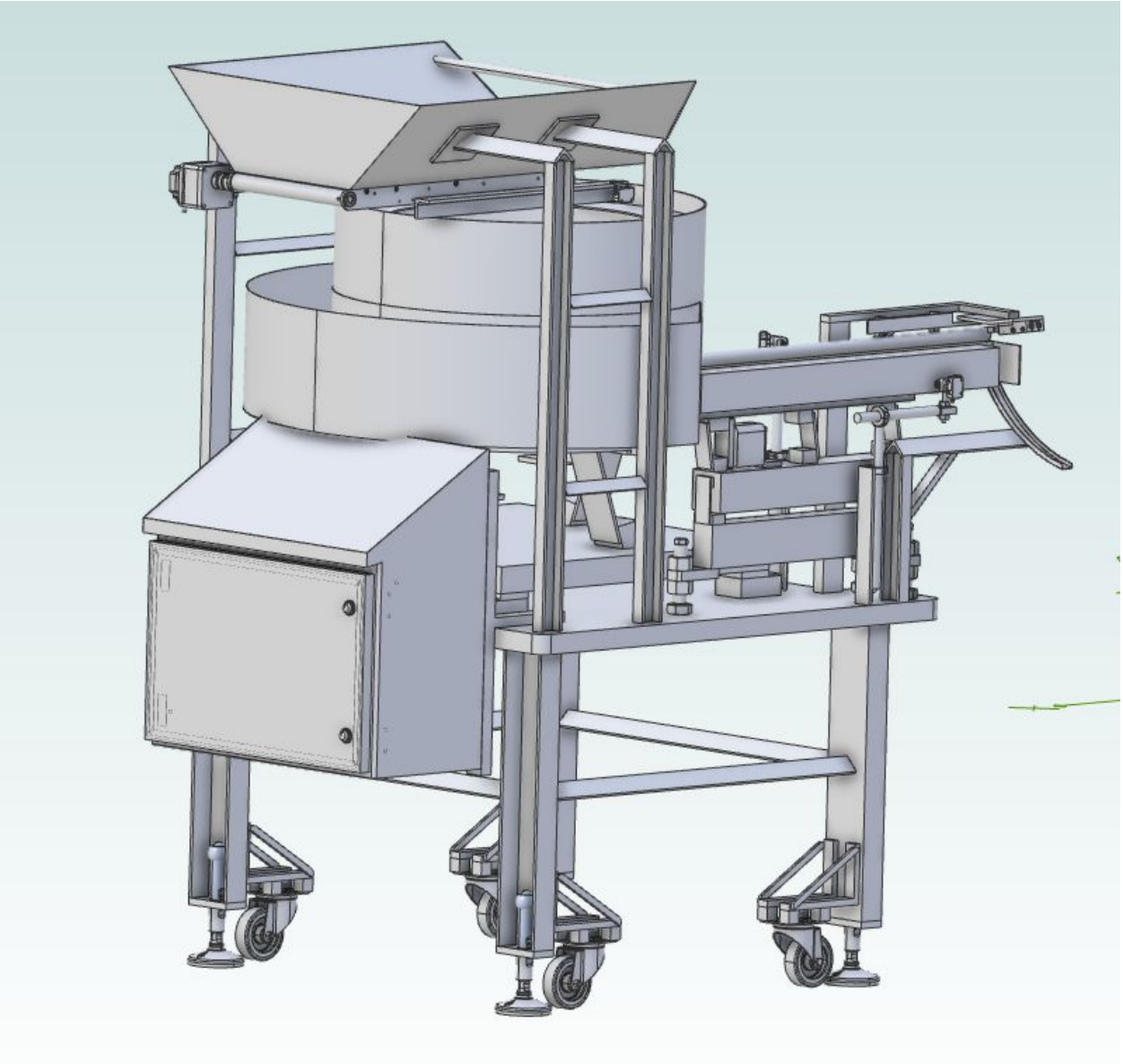

Table of Contents

Machine Installation Instructions.....PG. 3

Machine Start-up/Operation Instructions.....PG. 4

Timer Adjustment.....PG. 5

System Specifications.....PG. 5

Sanitation Instruction.....PG. 6

Recommended Spare Parts List.....PG. 7

Bolt Torque Specs/Coil Cap Adjustment.....PG.8

Drawings.....PG. 9

Electrical Schematic.....PG. 9

Control Components.....PG. 10

Layout Drawing.....PG. 11

Standard Parts List.....PG. 12

System Specifications

Machine Installation Instructions

1.) Roll feeder into operating location
2.) Level feeder with leveling feet below the frame
3.) Ensure weight is evenly distributed on all pads
4.) Connect FIRM Supplied Hubbell 10-Pin Plug to Feeding Concepts Receptacle on side of Control Enclosure
5.) Supply 120VAC (50/60Hz) to Terminals 1 (Blk) and Terminal 2 (Wht)
    a.) Refer to Electrical Schematic
6.) Ensure LED Buttons are properly illuminated and all control components have power
7.) Supply clean, dry air to the regulator. Set Regulator Pressure at 60PSI.
    a.) DO NOT MAKE ADJUSTMENTS TO AIR JET FLOW CONTROLS

Machine Startup/Operating Instructions

1.) Ensure system has power and air pressure is set to 60PSI
2.) Load belt hopper with new forks
3.) Enable System using the 3 Green Illuminated Buttons on the door of the enclosure.
4.) Allow a minute or two for the bowl to feed parts throughout the system
5.) Ensure there is no excessive wrattle, banging, etc.
6.) Observe system as it begins to feed (system may take up to 15 minutes to warm up in the cold environment) and make sure Bowl track and tooling is free of any debris that may cause jams.
7.) Allow Inline track to become fully supplied with parts, and that the bowl turns off when high level track switch is made
8.) Ensure LED Stacklight is properly Illuminated
    a.) Red - Machine has a malfunction (Jam sensor has not detected parts passing into inline track, a Jam must be cleared)
    b.) Orange/Amber - Hopper Level Low (Part present sensor in hopper detects no parts and the hopper needs to be filed)
    c.) Green - System is operating properly and needs no assistance

Timer Adjustment

Timer 1 - Hopper Low (Set time to determine how long it takes for stacklight to turn orange once hopper low level switch stops detecting forks)

Factory Setting: 30 Seconds

Timer 2 - Bowl Level (Set time to determine how long the hopper conveyor takes to turn on once the bowl level sensor stops detecting forks)

Factory Setting: 2 Seconds

Timer 3 - Full Track (Set time to determine how long high level track switch must be made until the bowl turns off)

Factory Setting: 1.8 Seconds

Timer 4 - Low Track

Factory Setting: Disabled

Timer 5 - Jam Detected (Set time to determine how long the jam sensor must go without detecting a fork before the stack light turns red to alert operator)

Factory Setting: 30 Seconds

Timer 6 - Discharge Valve (Determines how long the toggle discharge stroke is held to allow a fork to escape)

Factory Setting: 900 Milliseconds

System Specifications

Voltage: 120VAC 50/60Hz

Compressed Air: 60PSI

System settings when tested at Feeding Concepts at 45 parts per minute

Bowl Feeder: 69%

Inline: 62%

Conveyor: 50

- Torque Limit (100%)

Sanitation Instruction

1.) All machine components are watertight and rated for a washdown environment.
    a.) ALL CONNECTERS MUST BE TIGHT FOR WATERTIGHT CONNECTION
2.) All Construction is stainless steel, or Steel-It Epoxy Coated
3.) Avoid Direct High Pressure Spray on sensors, stacklight, and valves to prevent any damage
4.) Do NOT spray system unless control box is closed and sealed
5.) Belt can be removed by following the steps below
    a.) Disconnect low level hopper sensor cable
    b.) Remove hopper bin by taking out the 4 bolts on each side of the conveyor
    c.) Loosen the 2 pulley tensioner bolts
    d.) Remove 4 bolts holding the conveyor to frame on one side
    e.) Loosen the other 4 bolts on the other side of the conveyor
    f.) Lift the conveyor and slide the belt out the side

Recommended Spare Parts List

1.) Vibratory Feeders are robust and do not require many parts to keep in stock.

2.) It is recommended that you keep the following parts in stock to prevent down-time if a part failure occurs

a.) (1) E-0379 Electroless Nickel Plated Drive Unit Coil

b.) (3-4) Base Drive Unit Springs

c.) (3-4) Inline Driver Springs

d.) (1) E-0383 Electroless Nickel Plated Inline Coil

e.) (1) Keyence LR-ZH500CP

f.) (1) Keyence LR-ZB250CP

g.) (1) SMC Hygienic Solenoid Valve VFN2120N-5B-02N-X36B

h.) (1) Rodix FC-200 Feeder Control

i.) (2) IFM Efector Food Grade Hygienic Female Cable 4 Pin M8

j.) (2) IFM Efector Food Grade Hygienic Female Cable 4 pin M12

k.) (1) Pulley-Idler 30-7112C

l.) (1) Stainless Pulley Bearing Adaptor w/ Shield and Stainless Hardware Adaptor 30-3013-SS

m.)(1) 12" LP HB Anodize Drive Pulley Assembly w/ S/S Bearings

n.) (1) Belt: U2 style, fully sealed (top, bottom and sides) white urethane (Low friction surface, superior cut and abrasion resistance and is impervious to non chlorinated cutting fluids)Please allow 6 business days to ship.

o.) (1) Couplers 40-7247 Buna N Spider, for Flexible Shaft Coupler

p.) (1) 60 Watt IP-66 rated Brushless DC Motor. Please request lead time for multiple quantities. - Oriental Motor OR44VJ

q.) (1) BLE2 Driver (for BLDC Motor) 60 Watt Vari Speed, 100-120 VAC 50/60 Hz 1 phase Input. Please request lead time for multiple quantities. - Oriental Motor OMD-060-100-BLE2

r.) 3m (9.9 ft.) Connection Cable (F type connector) Oriental Motor CBL-BLM-3M-F

s.) 60 Watt BLDC Gearhead 100:1 Ratio W/ Stainless Steel 5/8" dia. Shaft. Please request lead time. - Oriental Motor ORS100K6

3.) Refer to the Standard Parts lists on PG. 10

Vibratory Fork Feeder Bolt Torque Specs

Drive Unit Bolts

- Coil Mount Stand Bolt (½-13) 80 Ft. Lbs.
- Tow Clamp Bolt (½-13) 115 Ft. Lbs.
- Top Clamp Block (⅝-11) 185 Ft. Lbs.
- Lower Threaded Clamp Block (3/4-10) 275 Ft. Lbs Minimum

Electromagnetic Coil Adjustment

Base Drive Coils

- Base Drive coil gaps should never exceed .060”
- Ideal coil gap is around .040”
    - Closer coils lead to better efficiency, and cooler operation.

Inline Coil

- Inline coil gap should never exceed .050”
- Ideal inline coil gap is near .040”

Drawings

Fork Control Electrical Schematic (FCI3998F)

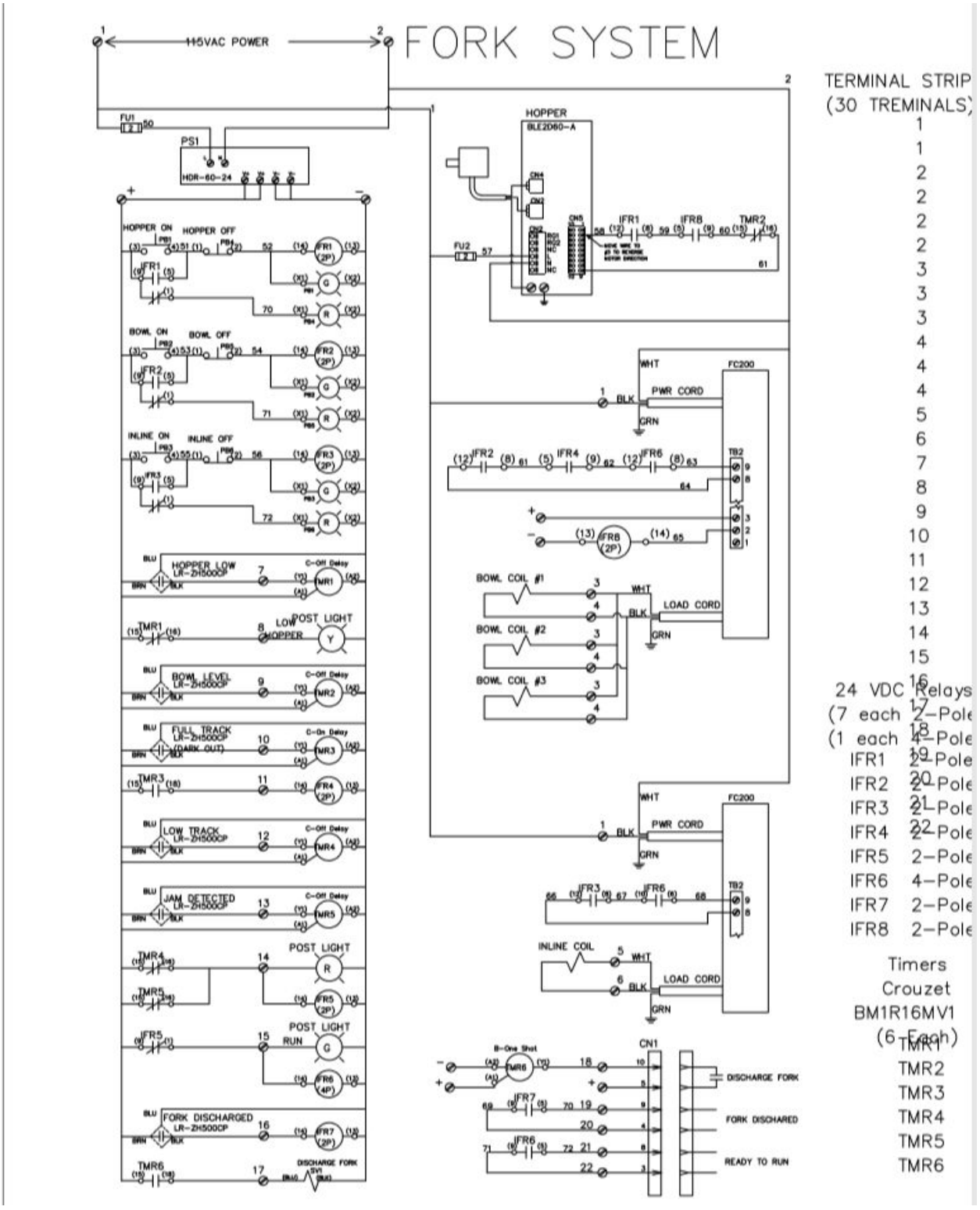

Control Components

Component	Part #	Input Voltage	Input Currents	Output Voltage	Max Output Current	Manufacturer
Oriental Motor Driver	BLE2D60-A	100-120VAC	1.7A	120VAC	.41 A	Oriental Motor
Rodix FC-200	121-000-2000	120VAC	12A	120VAC	12A @100% Duty	Rodix
Rodix FC-200	121-000-2000	120VAC	12A	120VAC	12A @100% Duty	Rodix
Meanwell Power Supply	HDR-60-24	120VAC	1.8A	24VDC	2.5A	Meanwell
(6) Crouznet Timers	BM1R16MV1	24VDC	15mA Switch	24VDC	16 A Max Contact	Crouznet
Banner Stack Light	K50BCLGRYPQ	24VDC	60mA			Banner
0383 Coil	383	120 VAC	1.1a Max			Controlled Automation
(3) 0379 Coil	379	120VAC	4.4a Max			Controlled Automation

Layout Drawing

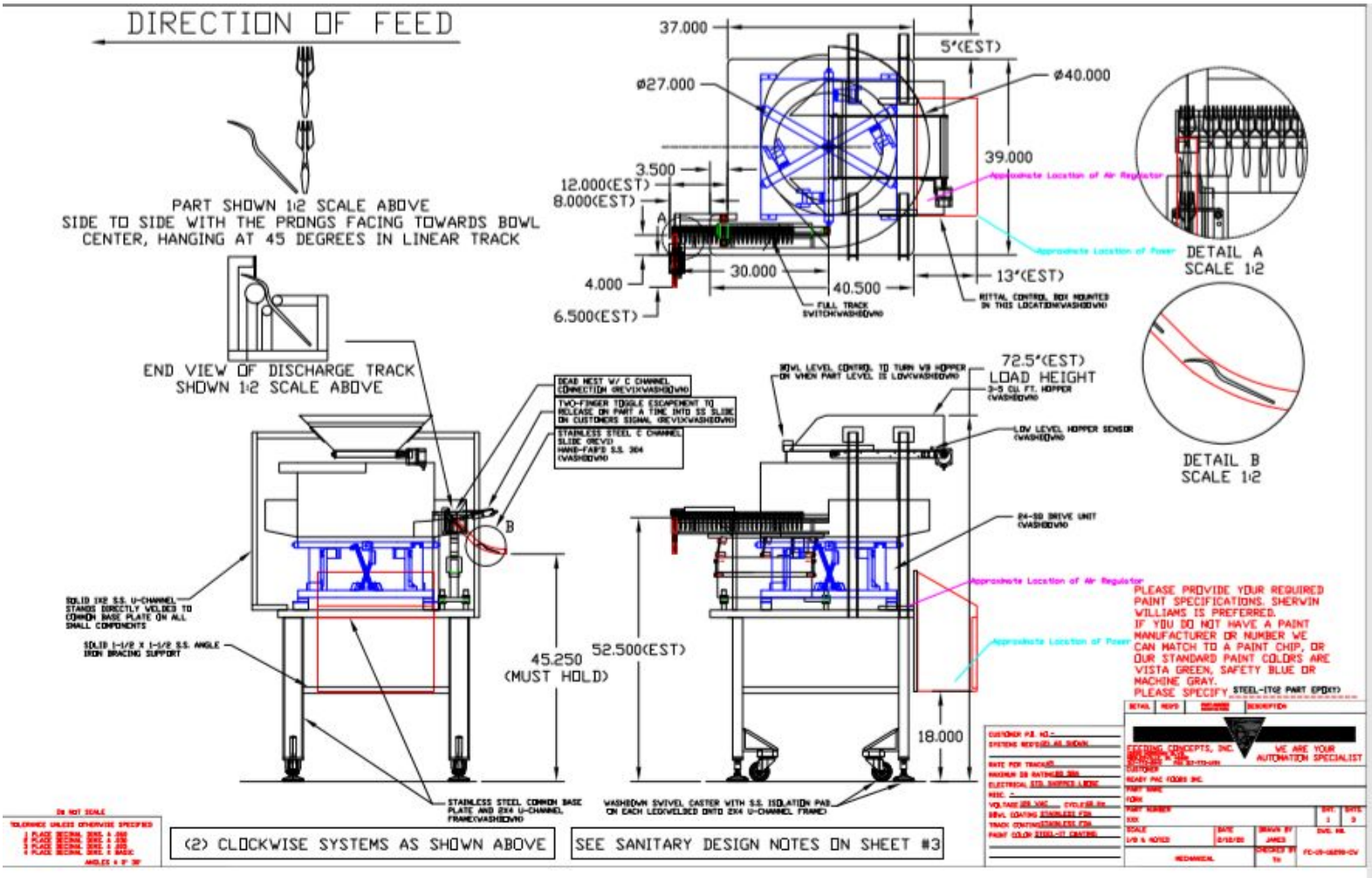

Standard Parts List

Part	Part #	Supplier	Quantity Per System
S/S 5/16-18 Capped Nut	91855A540	McMaster Carr	4
S/S 5/16-18 x 1" Threaded Stud	95412A583	McMaster Carr	4
S/S 3/4" Split Collar	6436K36	McMaster Carr	1
Oriental Washdown Motor	BLM460SHP-GFV	Oriental Motor	1
Keyence LRZ Photoelectric Sensor	LR-ZH500CP	Keyence	1
Keyence LRZ Photoelectric Sensor	LR-ZB250CP	Keyence	4
Banner Stack Light	K50BCLGRYPQ	Banner	1
3/8" Watertight Cord Grip w/ Locknut	Cat No. 2671	Thomas & Bett	8
3/8" Sealing Ring	Cat No. 5261	Thomas & Bett	8
Icotek Connector Cord Grip	KVT-ER 32	Icotek	1
1/2" Watertight Cord Grip W/ Locknut	KVT-ER	Thomas & Bett	3
1/2" Sealing Ring	7211 495	Thomas & Bett	3
Electroless Nickel Plated Drive Coil	E-0379	Controlled Auto.	3
Electroless Nickel Plated Inline Coil	E-0383	Controlled Auto.	1
Mini-Mover Hopper Conveyor W/ Fabric-Free Washdown Belt	410619	Mini-Mover	1
SMC Two-Finger Toggle Escapement	MIW12-12D2A	Flodraulic/SMC	1

Pnuematics Standard Parts List

Part	Part #	Qty Per System	Supplier
1/8" NPT S.S. Flow Control Fitting	AS2201FG-N01-07S	10	SMC
1/8" NPT Straight Push Fitting	KGB2H07-N01S	3	SMC
1/8" NPT Elbow Push Fitting	KQB2L07-N01S	7	SMC
10-32 Elbow Push Fitting	KQB2L07-32	3	SMC
1/4" Hex S.S Plug	4464K252	1	McMaster-Carr
1/4" S.S. Nipple	4830K131	1	McMaster-Carr
9 Port Nickel-Plated Manifold	5085K81	1	McMaster-Carr
Two-Finger Toggle Escapement	MIW12-12D2A	1	SMC
Washdown Hygenic Solenoid Valve	VFN2120N-5B-02N-X36B	1	SMC
Delrin Valve Sub-Plate Assembly (Manifold	VFN2000N-A01-DUL00363	1	SMC