KEYENCE

All-Purpose Laser Sensor
LR-Z Series

CE c UL us LISTED

IO-Link



ALL-PURPOSE LASER SENSOR

Position, Contrast, & Transparency Detection

TRUE DO-IT-ALL SENSOR

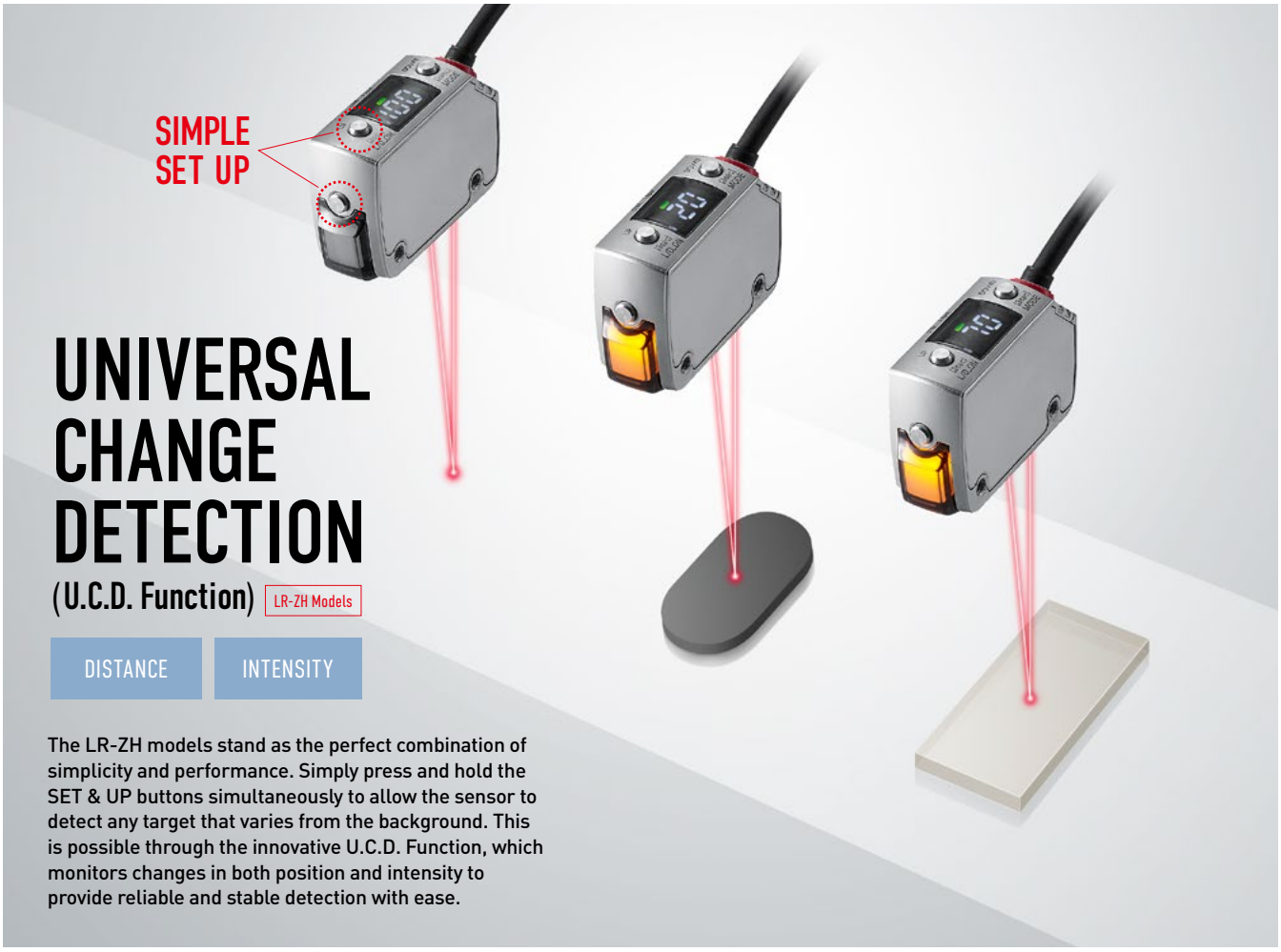

UNIVERSAL CHANGE DETECTION

(U.C.D. Function) LR-ZH Models

DISTANCE INTENSITY

The LR-ZH models stand as the perfect combination of simplicity and performance. Simply press and hold the SET & UP buttons simultaneously to allow the sensor to detect any target that varies from the background. This is possible through the innovative U.C.D. Function, which monitors changes in both position and intensity to provide reliable and stable detection with ease.

TRANSPARENT TARGETS

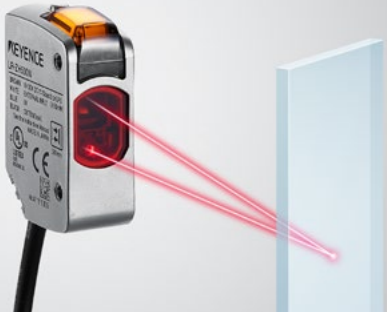

From clear bottles to plastic films, the LR-ZH models are able to easily detect transparent objects.

CONTRAST CHANGES

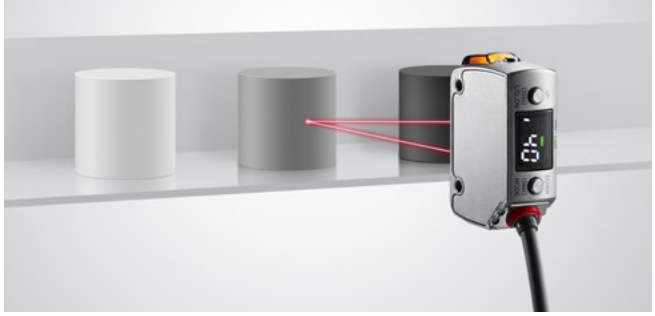

The ability to detect contrast changes ensures detection of targets close to the background



POSITION BASED DETECTION

DISTANCE

Position-based sensing, along with the diffuse sensor design, allow the LR-Z Series to dependably detect targets regardless of shape, color, or surface finish. All without the use of a cumbersome reflector.

DARK TARGETS



The Light Power Control Function adjusts light intensity to guarantee proper detection of dark and distant targets.

METAL TARGETS

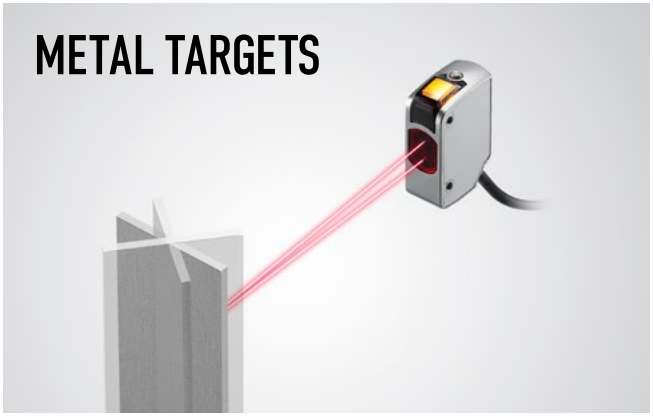

Even at extreme angles, shiny metal targets are stably detected with the versatile DATUM Calibration.

ADDITIONAL FEATURES



Rugged Metal Housing

The durable stainless steel housing provides increased longevity in rough factory environments.



Water and Dust Resistance

The impressive IP68 & IP69K enclosure ratings ensure detection in both washdown and heavy buildup areas.



7-Segment LED Display

Installation, calibration, and monitoring are made easy with the intuitive LED display.



Highly Visible Indicator

The sensor output status is easily recognized from a distance making troubleshooting a snap.



Simplified Operation

Three buttons is all it takes to fully utilize the innovative features of the LR-Z Series.

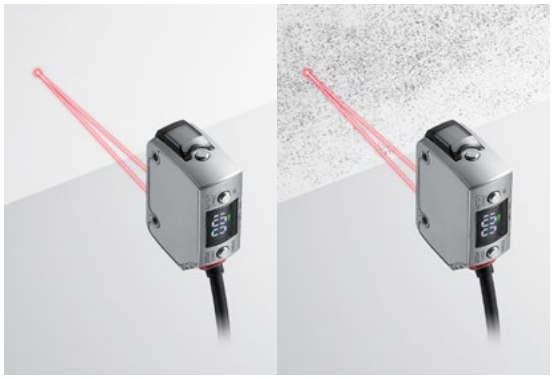

Dynamic Stability Control

The D.S.C. function ensures stable detection by accounting for changes in the background due to dust or vibration.

Lineup

Type	Detecting distance	Spot diameter	Standard detectable deviation	Connection method	Output	Model	Weight
 M18 threaded mount w/ M12 connector	25 to 490 mm 0.98" to 19.29"	Approx. ø3 mm ø0.12"	9 mm 0.35" (25 to 170 mm 0.98" to 6.69") 25 mm 0.98" (170 to 290 mm 6.69" to 11.42") 40 mm 1.57" (290 to 390 mm 11.42" to 15.35") 50 mm 1.97" (390 to 490 mm 15.35" to 19.29")	M12 4-pin	NPN/PNP selectable	**LR-ZH490CB** U.C.D. Function	75 g
 M18 threaded mount w/ M12 connector	25 to 240 mm 0.98" to 9.45"	Approx. 2.4 mm 0.09" Approx. 1.2 mm 0.05" At detecting distance of 240 mm 9.45"	9 mm 0.35" (25 to 170 mm 0.98" to 6.69") 25 mm 0.98" (170 to 240 mm 6.69" to 9.45")	M12 4-pin	Bipolar (NPN+ PNP)	**LR-ZB240CB**	
 M18 threaded mount w/ M12 connector	25 to 90 mm 0.98" to 3.54"	Approx. 2 mm 0.08" Approx. 1 mm 0.04" At detecting distance of 90 mm 3.54"	1.5 mm 0.06" (25 to 40 mm 0.98" to 1.57") 3 mm 0.12" (40 to 90 mm 1.57" to 3.54")	M12 4-pin		**LR-ZB90CB**	
 Rectangular w/ cable	35 to 500 mm 1.38" to 19.69"	Approx. ø3 mm ø0.12"	9 mm 0.35" (35 to 180 mm 1.38" to 7.09") 25 mm 0.98" (180 to 300 mm 7.09" to 11.81") 40 mm 1.57" (300 to 400 mm 11.81" to 15.75") 50 mm 1.97" (400 to 500 mm 15.75" to 19.69")	2 m cable	NPN	**LR-ZH500N** U.C.D. Function	110 g
					PNP	**LR-ZH500P** U.C.D. Function	
 Rectangular w/ M8 connector				M8 4-pin	NPN	**LR-ZH500CN** U.C.D. Function	55 g
					PNP	**LR-ZH500CP** U.C.D. Function	
				M8 3-pin		**LR-ZH500C3P** U.C.D. Function	
 Rectangular w/ cable	35 to 250 mm 1.38" to 9.84"	Approx. 2.4 mm 0.09" Approx. 1.2 mm 0.05" At detecting distance of 250 mm 9.84"	9 mm 0.35" (35 to 180 mm 1.38" to 7.09") 25 mm 0.98" (180 to 250 mm 7.09" to 9.84")	2 m cable	NPN	**LR-ZB250AN**	110 g
					PNP	**LR-ZB250AP**	
 Rectangular w/ M8 connector				M8 4-pin	NPN	**LR-ZB250CN**	55 g
					PNP	**LR-ZB250CP**	
				M8 3-pin		**LR-ZB250C3P**	
 Rectangular w/ cable	35 to 100 mm 1.38" to 3.94"	Approx. 2 mm 0.08" Approx. 1 mm 0.04" At detecting distance of 100 mm 3.94"	1.5 mm 0.06" (35 to 50 mm 1.38" to 1.97") 3 mm 0.12" (50 to 100 mm 1.97" to 3.94")	2 m cable	NPN	**LR-ZB100N**	110 g
					PNP	**LR-ZB100P**	
 Rectangular w/ M8 connector				M8 4-pin	NPN	**LR-ZB100CN**	55 g
					PNP	**LR-ZB100CP**	
				M8 3-pin		**LR-ZB100C3P**	

Mounting brackets

Type	Model	Compatible models	Material/Weight
 Standard mounting bracket (M3 screw × 2 supplied)	**OP-87408**[*1]	Rectangular	SUS316L 30 g
 Rear mounting bracket (M3 screw × 2 supplied)	**OP-87409**	Rectangular	SUS316L 30 g
 Robust mounting bracket (t = 3) (M3 screw × 2 supplied)	**OP-87410**[*2]	Rectangular	SUS316L 170 g
 M18 nut & Lock washer set	**OP-87413**	M18 Threaded Mount	M18 nut SUS316L 10 g Lock washer SUS304 5 g

*1 This bracket is dedicated to the cable type. Use OP-87409 or OP-87410, when installing the connector type.
*2 This can be used only in combination with an L-shaped connector cable, when installing the connector type.

Mounting brackets [adjustable brackets]

Type		Model	Compatible models	Material/Weight
 Adjustable bracket (M3 screw × 2 supplied)		**OP-87404**	Rectangular	Zinc nickel plating 95 g
 Adjustable bracket		**OP-87405**	M18 Threaded Mount	Zinc nickel plating 100 g
Screw length  Locking screw for adjustable bracket	Screw length: 45 mm 1.77"	**OP-87406**	—	Iron nickel plating 70 g
	Screw length: 65 mm 2.56"	**OP-87407**	—	Iron nickel plating 80 g

Reflectors (For U.C.D. function only)

Type	Model	Compatible models	Maximum detecting distance	Appearance
Reflector	**R-6L**	**LR-ZH models**	700 mm 27.56"	
Reflective tape	**OP-87123**		700 mm 27.56"	 25 × 25 mm 0.98" × 0.98"

* When using the reflector or reflective tape, ensure that the spot from the sensor is stationary on the reflector.

Adjustable bracket


Adjustable bracket for rectangular type


Adjustable bracket for threaded mount type

Cables

Specifications	Material	Appearance	Connection method	Length	Model
Standard	Cable: PVC Connector: Brass Nickel Plating	 Straight type	M12 4-pin	2 m 6.56'	**OP-75721**
				10 m 32.81'	**OP-85502**
			M8 4-pin	2 m 6.56'	**OP-73864**
				10 m 32.81'	**OP-73865**
	Cable: PVC Connector: Zinc Nickel Plating		M8 3-pin	2 m 6.56'	**OP-87627**
Oil resistant	Cable: PUR Connector: Zinc Nickel Plating		M12 4-pin	2 m 6.56'	**OP-87636**
				10 m 32.81'	**OP-87637**
			M8 4-pin	2 m 6.56'	**OP-87628**
				10 m 32.81'	**OP-87629**
Chemical resistant	Cable: PVC Connector: SUS316L		M12 4-pin	2 m 6.56'	**OP-87402**
			M8 4-pin	2 m 6.56'	**OP-87621**
			M8 3-pin	2 m 6.56'	**OP-87622**
Standard	Cable: PVC Connector: Brass Nickel Plating	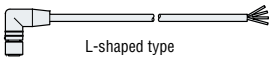 L-shaped type	M12 4-pin	2 m 6.56'	**OP-75722**
				10 m 32.81'	**OP-87274**
			M8 4-pin	2 m 6.56'	**OP-85497**
	Cable: PVC Connector: Zinc Nickel Plating		M8 3-pin	2 m 6.56'	**OP-87631**
Oil resistant	Cable: PUR Connector: Zinc Nickel Plating		M12 4-pin	2 m 6.56'	**OP-87640**
				10 m 32.81'	**OP-87641**
			M8 4-pin	2 m 6.56'	**OP-87632**
				10 m 32.81'	**OP-87633**
Chemical resistant	Cable: PVC Connector: SUS316L		M12 4-pin	2 m 6.56'	**OP-87403**
			M8 4-pin	2 m 6.56'	**OP-87619**
			M8 3-pin	2 m 6.56'	**OP-87620**

Enclosure ratings for each cable type

Enclosure rating	Standard cable	Oil resistant cable	Chemical resistant cable
IP67 IEC60529	✓	✓	✓
IP68 IEC60529	–	✓	✓
IP69K DIN40050-9	–	–	✓
ECOLAB, Diversey	–	–	✓*

* Have passed resistance tests with cleaning agents from multiple manufacturers.

I/O circuit diagram

Bipolar type (LR-ZBxB)

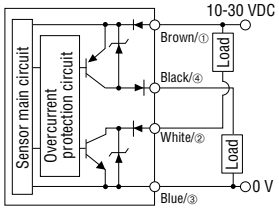

NPN type (LR-ZxN)

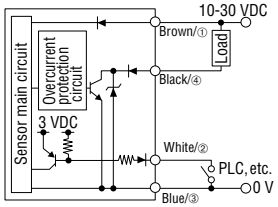

PNP type (LR-ZxP)

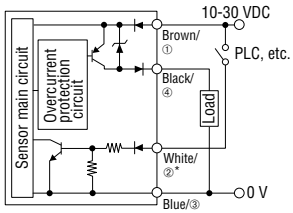

* Cable type and M8 connector 4 pin type only

LR-ZH490CB
(When NPN output is selected)

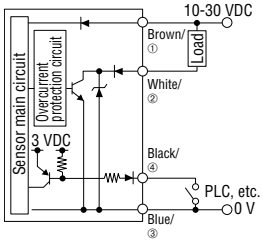

LR-ZH490CB
(When PNP output is selected)

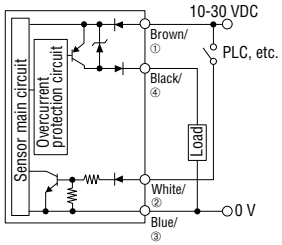

M12 Connector pin layout (4-pin type)



M8 Connector pin layout (4-pin type)



M8 Connector pin layout (3-pin type)



Universal Change Detection:

Universal Change Detection works by storing the light receiving pattern (distance and returned light intensity) associated with a set background or reference surface. From here, the sensor is able to detect any variations from the calibrated light receiving pattern (position changes and/or intensity changes).

Background

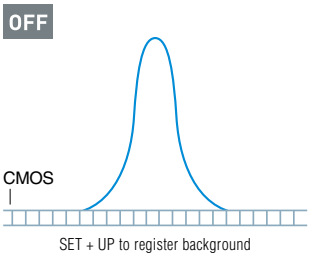

Position Change

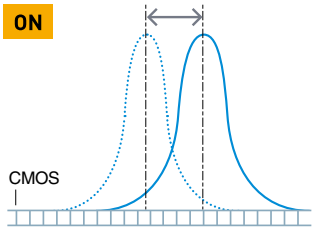

Intensity Change

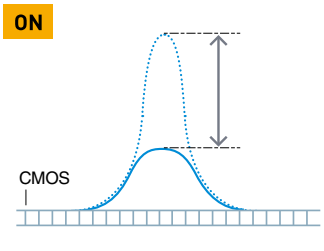

Specifications

Type			Distance based laser sensor					
Appearance			M18 Threaded mount			Rectangular		
Model	Bipolar	M12 connector 4-pin	**LR-ZH490CB*1** U.C.D. Function	**LR-ZB240CB**	**LR-ZB90CB**	—	—	—
	NPN	2 m 6.56' cable	—	—	—	**LR-ZH500N** U.C.D. Function	**LR-ZB250AN**	**LR-ZB100N**
		M8 connector 4-pin	—	—	—	**LR-ZH500CN** U.C.D. Function	**LR-ZB250CN**	**LR-ZB100CN**
	PNP	2 m 6.56' cable	—	—	—	**LR-ZH500P*1** U.C.D. Function	**LR-ZB250AP**	**LR-ZB100P**
		M8 connector 4-pin	—	—	—	**LR-ZH500CP*1** U.C.D. Function	**LR-ZB250CP**	**LR-ZB100CP**
		M8 connector 3-pin	—	—	—	**LR-ZH500C3P*1** U.C.D. Function	**LR-ZB250C3P**	**LR-ZB100C3P**
Detectable distance			25 to 490 mm 0.98" to 19.29" (465 to 0)*2	25 to 240 mm 0.98" to 9.45" (215 to 0)*2	25 to 90 mm 0.98" to 3.54" (650 to 0)*2	35 to 500 mm 1.38" to 19.69" (465 to 0)*2	35 to 250 mm 1.38" to 9.84" (215 to 0)*2	35 to 100 mm 1.38" to 3.94" (650 to 0)*2
Standard detectable deviation			25 to 170 mm 0.98" to 6.69" : 9 mm 0.35" 170 to 290 mm 6.69" to 11.42" : 25 mm 0.98" 290 to 390 mm 11.42" to 15.35" : 40 mm 1.57" 390 to 490 mm 15.35" to 19.29" : 50 mm 1.97"	25 to 170 mm 0.98" to 6.69" : 9 mm 0.35" 170 to 240 mm 6.69" to 9.45" : 25 mm 0.98"	25 to 40 mm 0.98" to 1.57" : 1.5 mm 0.06" 40 to 90 mm 1.57" to 3.54" : 3 mm 0.12"	35 to 180 mm 1.38" to 7.09" : 9 mm 0.35" 180 to 300 mm 7.09" to 11.81" : 25 mm 0.98" 300 to 400 mm 11.81" to 15.75" : 40 mm 1.57" 400 to 500 mm 15.75" to 19.69" : 50 mm 1.97"	35 to 180 mm 1.38" to 7.09" : 9 mm 0.35" 180 to 250 mm 7.09" to 9.84" : 25 mm 0.98"	35 to 50 mm 1.38" to 1.97" : 1.5 mm 0.06" 50 to 100 mm 1.97" to 3.94" : 3 mm 0.12"
Display resolution			1 to 5 (1 to 5 mm 0.04" to 0.20")	1 to 3 (1 to 3 mm 0.04" to 0.12)	2 (0.2 mm 0.01")	1 to 5 (1 to 5 mm 0.04" to 0.20")	1 to 3 (1 to 3 mm 0.04" to 0.12")	2 (0.2 mm 0.01")
Spot size			Approx. ø3 mm ø0.12"	Approx. 2.4 × 1.2 mm 0.09" × 0.05" at 240 mm 9.45"	Approx. 2 × 1 mm 0.08" × 0.04" at 90 mm 3.54"	Approx. ø3 mm ø0.12"	Approx. 2.4 × 1.2 mm 0.09" × 0.05" at 250 mm 9.84"	Approx. 2 × 1 mm 0.08" × 0.04" at 100 mm 3.94"
Response time			1.5 ms / 10 ms / 50 ms selectable					
Light source	Type		Red laser (660 nm)					
	Laser class		Class 2 laser product (IEC60825-1) Class II Laser product (FDA(CDRH) Part1040.10)	Class 1 laser product (IEC60825-1, FDA (CDRH) Part1040.10*3)		Class 2 laser product (IEC60825-1) Class II Laser product (FDA(CDRH) Part1040.10)	Class 1 laser product (IEC60825-1, FDA (CDRH) Part1040.10*3)	
Function	Indicator		3-digit 7-segment display (white), output indicator (yellow), DATUM indicator (orange), 1 spot indicator (green)	3-digit 7-segment display (red), output indicator (yellow), DATUM indicator (orange), 1 spot indicator (green)		3-digit 7-segment display (white), output indicator (yellow), DATUM indicator (orange), 1 spot indicator (green)	3-digit 7-segment display (red), output indicator (yellow), DATUM indicator (orange), 1 spot indicator (green)	
	Timer		OFF/ON delay/OFF delay/One-shot					
Specifications	Power voltage		10 to 30 VDC, including 10% ripple (P-P), Class 2 or LPS					
	Power consumption		450 mW or less (18 mA or less at 24 V, 34 mA or less at 12 V)					
	Control output		LR-ZHxB: NPN Open collector/PNP Open collector selectable, LR-ZBxB: NPN+PNP Open collector, LR-ZxN: NPN Open collector, LR-ZxP: PNP Open collector, Applied voltage 30 VDC or less, Control current 100 mA or less, Residual voltage 1.2 V or less at 10 mA or less, 2 V or less at 10 to 100 mA					
	Protection circuit		Protection against reverse power connection, output overcurrent, output surge, reverse output connection					
	Output operation		Light-ON / Dark-ON selectable					
	External input *4		Input time calibration: 35 ms or more ON, 35 ms or more OFF Laser emission stop: 2 ms or more ON, 20 ms or more OFF Short-circuit current NPN: 1 mA or less/PNP: 2 mA or less	None		Input time calibration: 35 ms or more ON, 35 ms or more OFF Laser emission stop: 2 ms or more ON, 20 ms or more OFF Short-circuit current NPN: 1 mA or less/PNP: 2 mA or less		
Environmental resistance	Enclosure rating		IP68(IEC60529), IP69K(DIN40050-9), NEMA 4X, 6P, 13(NEMA250), ECOLAB*5, Diversey*5					
	Ambient light *6		Incandescent lamp: 10000 lux or less Sunlight: 20000 lux or less at 240 mm 9.45" Incandescent lamp: 2000 lux or less Sunlight: 4000 lux or less at 490mm 19.29"	Incandescent lamp: 2000 lux or less Sunlight: 4000 lux or less	Incandescent lamp: 4000 lux or less Sunlight: 8000 lux or less	Incandescent lamp: 10000 lux or less Sunlight: 20000 lux or less at 250 mm 9.84" Incandescent lamp: 2000 lux or less Sunlight: 4000 lux or less at 500 mm 19.69"	Incandescent lamp: 2000 lux or less Sunlight: 4000 lux or less	Incandescent lamp: 4000 lux or less Sunlight: 8000 lux or less
	Ambient temperature		-10 to +50°C 14 to 122°F (No freezing)					
	Storage temperature		-25 to +75°C -13 to 167°F (No freezing)					
	Ambient humidity		35 to 85%RH (No condensation)					
	Shock resistance		1000 m/s² in X, Y, Z axis directions respectively 6 times					
	Vibration resistance		10 to 55 Hz Double amplitude 1.5 mm 0.06" in the X, Y, Z axis directions respectively, 2 hours					
	Insulating resistance		20 MΩ or more (500 VDC)					
	Withstand voltage		1000 VAC 50/60 Hz 1 min					
Material			Case: SUS316L, Display: PES, Lens cover: PMMA with scratch-resistant coating, Packing/Connector ring: FKM, Nut: SUS316L, Lock washer: SUS304			Case: SUS316L, Display: PES, Lens cover: PMMA with scratch-resistant coating, Packing/Connector ring: FKM		
Accompanying items			Instruction Manual, FDA warning/ certification/ identification label, Laser warning/explanation labels	Instruction Manual, Certification/Identification label (FDA)		Instruction Manual, FDA warning/ certification/ identification label, Laser warning/explanation labels	Instruction Manual, Certification/Identification label (FDA)	

*1 IO-Link specification v.1.1/COM2 (38.4 kbps) is supported. (LR-ZH490CB : Only when PNP output is selected.) You can download a setup file from the KEYENCE website (http://www.keyence.com). If using the product in an environment in which downloading files over the internet is not possible, contact your nearest KEYENCE office. *2 Display readings can be used as a guide for the detecting distance. When the setting value is tuned, the readout shifts. When the value exceeds "-99", "-FF" is displayed. *3 The laser classification for FDA (CDRH) is implemented based on IEC60825-1 in accordance with the requirements of Laser Notice No.50. *4 M8 connector (3-pin) type does not include the external input function. *5 Have passed resistance tests with cleaning agents from multiple manufactures. *6 When the response time is 10 ms

Reference data

Minimum Detectable Position Change (Typical Data)

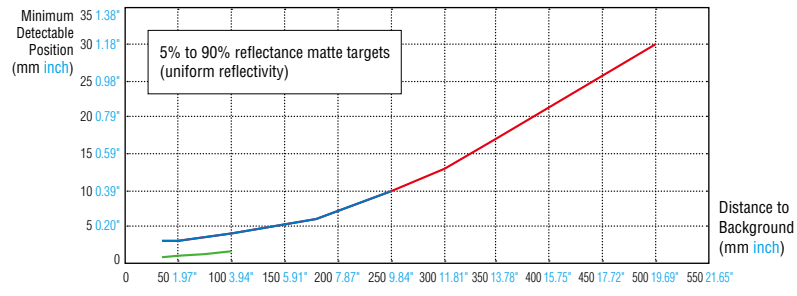

Laser warning label (LR-ZH Models Only)

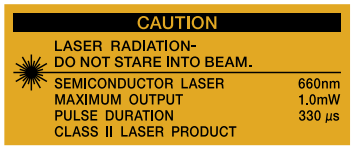

LR-ZH490CB/ ZB240CB/ ZB90CB

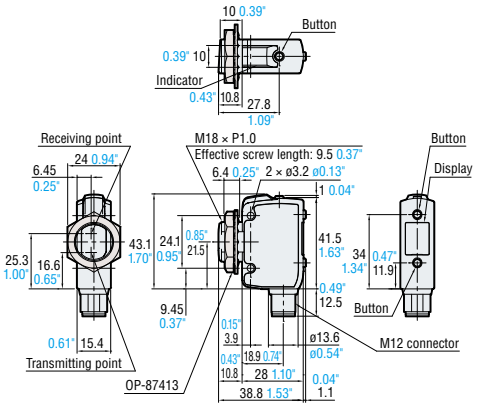

LR-ZH500N/ZH500P/ ZB250AN/ZB250AP/ ZB100N/ZB100P

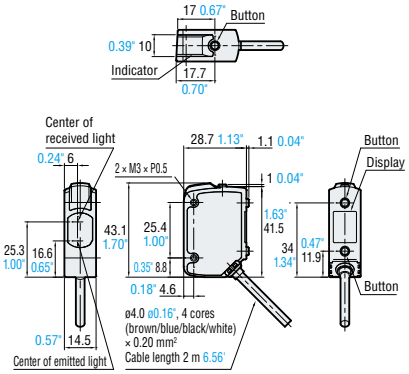

LR-ZH500CN/ZH500CP/ZH500C3P/ ZB250CN/ZB250CP/ZB250C3P/ ZB100CN/ZB100CP/ZB100C3P

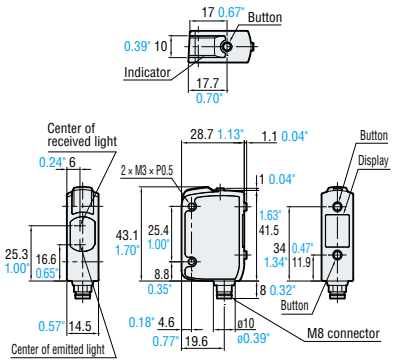

OP-87408

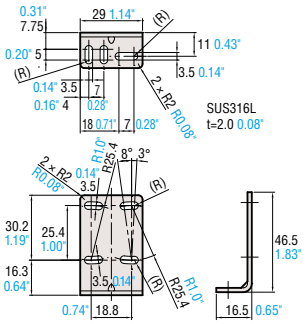

OP-87409

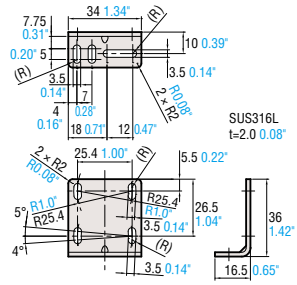

OP-87410

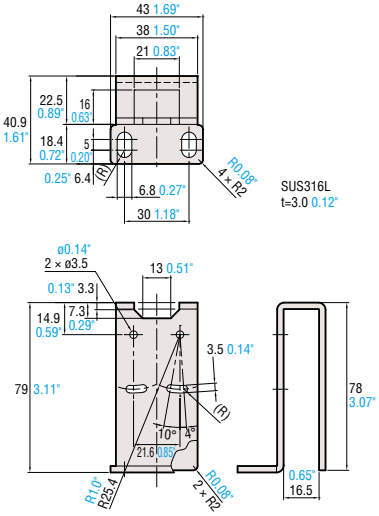

OP-87413

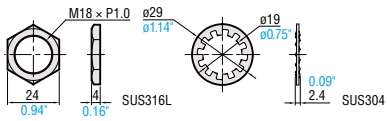

OP-87406/87407

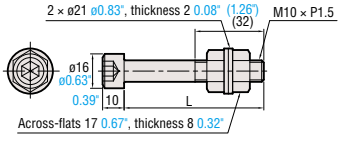

Iron nickel plating
L=45 mm 1.77" : OP-87406
L=65 mm 2.56" : OP-87407

OP-87404

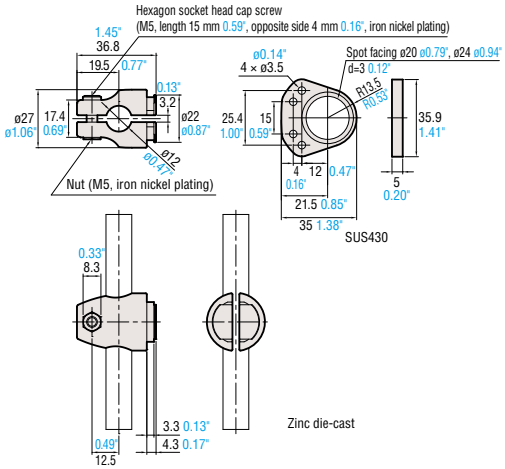

OP-87404 + LR-ZH500N

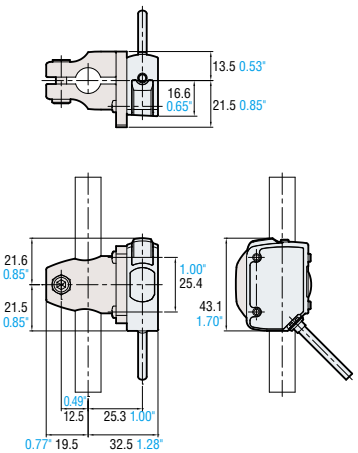

OP-87406/87407 + OP-87404 + LR-ZH500N

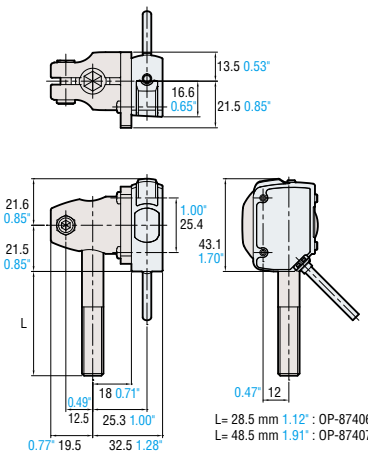

L= 28.5 mm 1.12" : OP-87406
L= 48.5 mm 1.91" : OP-87407

Unit: mm inch

OP-87405

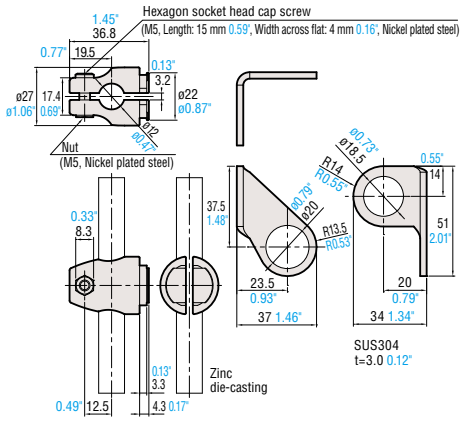

OP-87405 + LR-ZH490CB

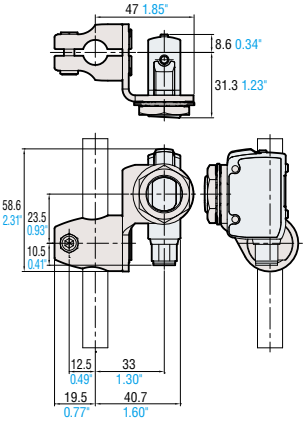

OP-87406/87407 + OP-87405 + LR-ZH490CB

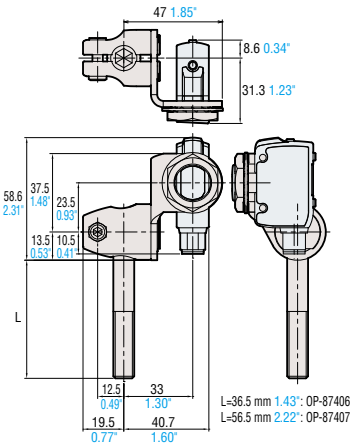

Reflector R-6L

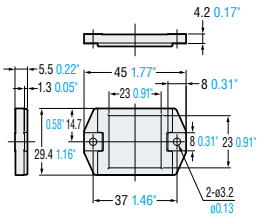

OP-75721/85502

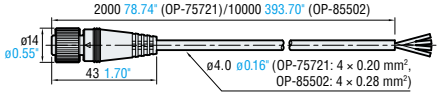

OP-87636/ 87637

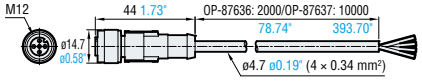

OP-87402

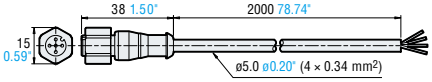

OP-73864 / 73865

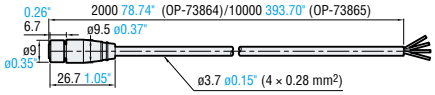

OP-87627

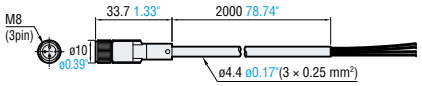

OP-87628/87629

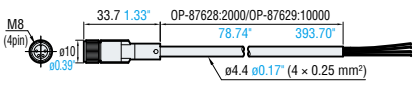

OP-87621

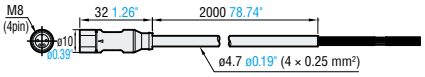

OP-87622

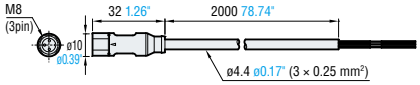

OP-75722 / 87274

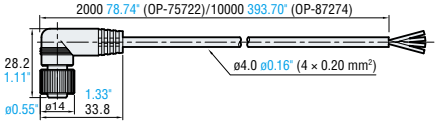

OP-87640/87641

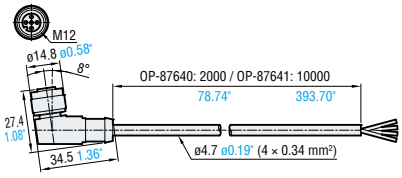

OP-87403

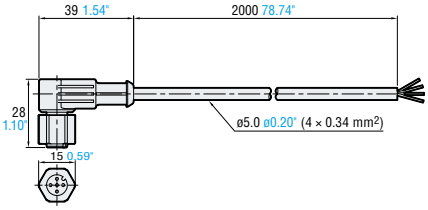

OP-85497

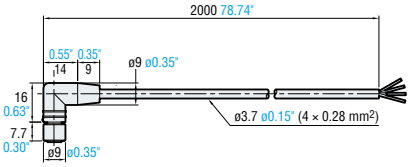

OP-87631

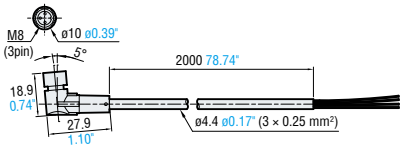

OP-87632/87633

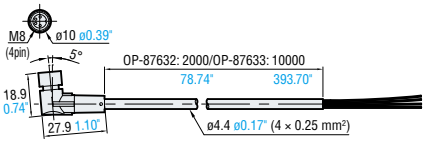

OP-87619

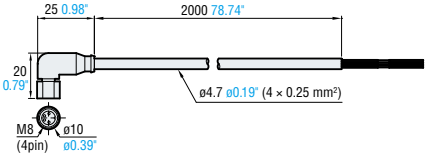

OP-87620

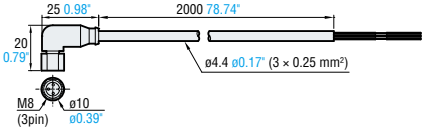

M12 Connector pin layout (4-pin type)

M8 Connector pin layout (4-pin type)

M8 Connector pin layout (3-pin type)

No.	Color
①	Brown
②	White
③	Blue
④	Black

Note:
When the L-shaped connector is in use, the cable is fixed in the direction shown on the right. The connector is not rotatable.

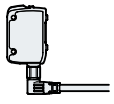

CAD DATA DOWNLOAD
www.keyence.com/CADG

RELATED PRODUCTS

LR-T SERIES

TOF Laser Sensor



Sensors

Type		Detecting distance	Features	Model
	Cable (2 m 6.56')	60 to 5000 mm 2.36" to 196.85"	Adjustable Spot Analog Output	**LR-TB5000**
	M12 connector (Cable sold separately)			**LR-TB5000C/LR-TB5000CL**
	Cable (2 m 6.56')	60 to 2000 mm 2.36" to 78.74"	Smaller Size	**LR-TB2000**
	M12 connector (Cable sold separately)			**LR-TB2000C/LR-TB2000CL**

Brackets and Accessories

Type	Model	Type	Model	Type	Model
 Adjustable angle bracket (For LR-TB5000 Series) (M4 screw × 2 supplied)	**OP-87773**	 Adjustable bracket (For LR-TB5000 Series) (M4 screw × 2 supplied)	**OP-87774**	 Front protection cover (For LR-TB5000 Series)	**OP-87778**
 Adjustable angle bracket (For LR-TB2000 Series) (M3 screw × 2 supplied)	**OP-87771**	 Adjustable bracket (For LR-TB2000 Series) (M3 screw × 2 supplied)	**OP-87772**	 Front protection cover (For LR-TB2000 Series)	**OP-87776**
 Small bracket (For LR-TB2000 Series) (M3 screw × 2 supplied)	**OP-87770**	 M12 Locking screw (For adjustable bracket) (85 mm 3.35")	**OP-87775**		

LR-W SERIES

Full-Spectrum Sensor



Sensors: Standard Models

Type		Detecting distance	Light source	Model
 Cable (2 m 6.56')	Standard Type	30 to 500 mm 1.18" to 19.69"	White LED	**LR-W500**
 M12 connector (Cable sold separately)				**LR-W500C**

Sensors: Small/Dual Spot Models

Type		Detecting distance	Light source	Model
 Cable (2 m 6.56')	Small/Dual Spot Type	30 to 70 mm 1.18" to 2.76"	White LED	**LR-W70**
 M12 connector (Cable sold separately)				**LR-W70C**

Sensors: Fiber Extension Models

Type		Detecting distance	Light source	Model
 Cable (2 m 6.56')	Fiber Type	Detecting Distance and Min. Spot Diameter Based on Attached Fiber Head	White LED	**LR-WF10**
 M12 connector (Cable sold separately)				**LR-WF10C**

Brackets and Accessories

Type	Applicable Sensors	Model
 Standard mounting bracket (M3 screw × 2 supplied)	LR-W500/ W70/WF10	**OP-88021***1
 Small mounting bracket (M3 screw × 2 supplied)	LR-W70/ WF10	**OP-88022***1
 Adjustable bracket (M3 screw × 2 supplied)	LR-W500(C)/ W70(C)/ WF10(C)	**OP-88023**
 Adjustable bracket locking screw (105 mm 4.13")		**OP-88024**

*1 The 4-pin M12 connector type may not be mounted in the orientation shown in the picture (connector downward). Confirm the dimensions and surroundings carefully.

Type	Applicable Sensors	Model
 Luster canceling attachment	LR-W500(C)	**LR-WA1***1*2
 Luster canceling attachment	LR-W70(C)	**LR-WA2***1*2

*1 When using LR-WA1 or LR-WA2, detecting range may decrease on targets with low reflectance. Perform sufficient checks in the actual installation environment.

*2 When using the LR-WA1 or LR-WA2, the enclosure rating (IP65/IP67) is not met.

LR-T/LR-W SERIES

Cables



Cables

Cable Material	Type	Length	Compatible Model	Item
PVC	Straight	2 m 6.56'	LR-T	**OP-87634**
			LR-W	**OP-75721**
		5 m 16.40'	LR-W	**OP-87272**
		10 m 32.81'	LR-T	**OP-87635**
			LR-W	**OP-85502**
	L-Shape	2 m 6.56'	LR-W	**OP-75722**
		5 m 16.40'	LR-W	**OP-87273**
		10 m 32.81'	LR-W	**OP-87274**
PUR	Straight	2 m 6.56'	LR-T/LR-W	**OP-87636**
		10 m 32.81'	LR-T/LR-W	**OP-87637**
	L-Shape	2 m 6.56'	LR-W	**OP-87640**
		10 m 32.81'	LR-W	**OP-87641**

* To ensure IP ratings are met, it is important to use cables specified for the particular sensor series and consult the sensor series brochure.

MU-N SERIES

Multi-Sensor Controller

Compatible Series
LR-T/LR-W/FD-Q



Controller

Type	Control output	External input	Analog output	Model
 Main unit	4 standard outputs max.* (15 signal combinations available using binary logic)	5 inputs max.*	1 output max.*	**MU-N11**
 Expansion unit			—	**MU-N12**

* Specification when used with LR-W Series. For use with LR-T Series, contact KEYENCE for detail.

Cables (MU-N Power Cable)

Appearance	Applicable unit	Cable material	Cable end	Controller side	Length	Model
	Main unit	PVC (Polyvinyl chloride)	8-core loose wires	Connector	2 m 6.56'	**MU-CB8**
			4-core loose wires			**MU-CB4**
	Expansion unit		6-core loose wires			**MU-CB6**
			2-core loose wires			**MU-CB2**
	Main unit		M12 4-pin straight		0.3 m 0.98'	**MU-CC4**

Cables (Sensor to Controller Cable)

Appearance	Cable material	Sensor side	Controller side	Length	Model
	PVC (Polyvinyl chloride)	M12 4-pin straight	Connector	2 m 6.56'	**OP-88025**
				10 m 32.81'	**OP-88026*1**
		M12 4-pin L-shape		2 m 6.56'	**OP-88027**
				10 m 32.81'	**OP-88028*1**

*1 The 10 m 32.81' cable includes one spare connector for the controller side.

Connectors

Appearance	Type	Applicable model	Model
	For PVC (Polyvinyl chloride) cable	Non-connector type LR-W and LR-T Series sensors OP-75721/87272/85502 OP-75722/87273/87274	**OP-88029**
	For PUR (Polyurethane) cable	OP-87636/87637 OP-87640/87641	**OP-88030**

Additional Sensor Series

KEYENCE offers a complete lineup of self-contained sensors

TOF LASER SENSORS
LR-T Series

Detecting Distance [0.06 to 5 m 0.20' to 16.40']



- Max. 5 m 16.40' detecting distance
- Custom IC for superior detecting capabilities
- Metal body with IP65/IP67 enclosure rating

FULL-SPECTRUM SENSORS
LR-W Series

Detect any changes in appearance



- Innovative White LED Light Source
- Long Range, Dual Spot, and Fiber Models
- Controller Expansion for Increased Functionality

KEYENCE

CALL TOLL FREE | TO CONTACT YOUR LOCAL OFFICE **1-888-KEYENCE** 1-888-539-3623

www.keyence.com

SAFETY INFORMATION
Please read the instruction manual carefully in order to safely operate any KEYENCE product.

CONTACT YOUR NEAREST OFFICE FOR RELEASE STATUS

KEYENCE CORPORATION OF AMERICA

Head Office 500 Park Boulevard, Suite 200, Itasca, IL 60143, U.S.A. **PHONE:** +1-201-930-0100 **FAX:** +1-855-539-0123 E-mail: keyence@keyence.com

AL Birmingham, **AR** Little Rock, **AZ** Phoenix, **CA** San Francisco, **CA** San Jose, **CA** Cupertino, **CA** Los Angeles, **CA** Irvine, **CO** Denver, **FL** Tampa, **GA** Atlanta, **IA** Iowa, **IL** Chicago, **IN** Indianapolis, **KY** Louisville, **MA** Boston, **MI** Detroit, **MI** Grand Rapids, **MN** Minneapolis, **MO** Kansas City, **MO** St. Louis, **NJ** Elmwood Park, **NY** Rochester, **NC** Charlotte, **NC** Raleigh, **OH** Cincinnati, **OH** Cleveland, **OR** Portland, **PA** Philadelphia, **PA** Pittsburgh, **SC** Greenville, **TN** Knoxville, **TN** Nashville, **TX** Austin, **TX** Dallas, **WA** Seattle, **WI** Milwaukee

KEYENCE CANADA INC.

Head Office PHONE: +1-905-366-7655 FAX: +1-905-366-1122 E-mail: keyencecanada@keyence.com
Montreal PHONE: +1-514-694-4740 FAX: +1-514-694-3206 Windsor PHONE: +1-905-366-7655 FAX: +1-905-366-1122

KEYENCE MEXICO S.A. DE C.V.

PHONE: +52-55-8850-0100 FAX: +52-81-8220-9097
E-mail: keyencemexico@keyence.com

The information in this publication is based on KEYENCE's internal research/evaluation at the time of release and is subject to change without notice.
Company and product names mentioned in this catalog are either trademarks or registered trademarks of their respective companies.
The specifications are expressed in metric units. The English units have been converted from the original metric units.
Copyright (c) 2016 KEYENCE CORPORATION. All rights reserved.

KA1-1017

LRZ_S-KA-C3-US 1038-3 611C85