Product data sheet



VTB18-4P1240V

V18V

CYLINDRICAL PHOTOELECTRIC SENSORS

SICK
Sensor Intelligence.



Illustration may differ

Ordering information

Type	Part no.
VTB18-4P1240V	6035493

Other models and accessories ➜ www.sick.com/V18V

Detailed technical data

Features

Sensor/ detection principle	Photoelectric proximity sensor, Background suppression
Dimensions (W x H x D)	18 mm x 18 mm x 83 mm
Housing design (light emission)	Cylindrical
Housing length	83 mm
Thread diameter (housing)	M18 x 1
Sensing range max.	0 mm ... 140 mm [1]
Sensing range	0 mm ... 130 mm
Type of light	Visible red light
Light source	LED [2]
Light spot size (distance)	Ø 15 mm (130 mm)
Wave length	660 nm
Adjustment	Single teach-in button (Sensing range) Manual, via Touch-Teach-in
Special applications	Hygienic and washdown zones

[1] Object with 90 % reflectance (referred to standard white, DIN 5033).

[2] Average service life: 100,000 h at T_U = +25 °C.

Mechanics/electronics

Supply voltage	10 V DC ... 30 V DC [1]
Ripple	± 10 % [2]
Current consumption	50 mA [3]
Switching output	PNP [4]
Switching mode	Light/dark switching [4]
Switching mode selector	Selectable via L/D control cable
Signal voltage PNP HIGH/LOW	Approx. VS – 2.0 V / 0 V
Output current $I_{max.}$	≤ 100 mA
Response time	≤ 0.5 ms [5]
Switching frequency	1,000 Hz [6]
Connection type	Male connector M12, 4-pin [7]
Circuit protection	A [8] B [9] C [10] D [11]
Protection class	III
Weight	120 g
Housing material	Stainless steel, Stainless steel V4A (1.4404, 316L)
Optics material	Plastic, Plan, PPS (Grilamid)
Enclosure rating	IP67 IP68 IP69K [12]
Ambient operating temperature	–25 °C ... +80 °C [13]
Ambient temperature, storage	–40 °C ... +80 °C
UL File No.	FDA, UL No. NRKH.E181493 & cUL No. NRKH7.E181493

[1] Limit values.
[2] May not exceed or fall below U_V tolerances.
[3] Without load, at VS 30 V DC.
[4] Control wire open: dark switching D.ON.
[5] Signal transit time with resistive load.
[6] With light/dark ratio 1:1.
[7] With gold plated contact pins, PPS with FDA certificate.
[8] A = V_S connections reverse-polarity protected.
[9] B = interference suppression.
[10] D = outputs overcurrent and short-circuit protected.
[11] D = inputs and output reverse-polarity protected.
[12] With correct mounted IP69K connector.
[13] +100 °C at max 15 minutes.

Safety-related parameters

$MTTF_D$	290 years
DC_{avg}	0 %

Classifications

ECl@ss 5.0	27270904

ECl@ss 5.1.4	27270904
ECl@ss 6.0	27270904
ECl@ss 6.2	27270904
ECl@ss 7.0	27270904
ECl@ss 8.0	27270904
ECl@ss 8.1	27270904
ECl@ss 9.0	27270904
ECl@ss 10.0	27270904
ECl@ss 11.0	27270904
ETIM 5.0	EC002719
ETIM 6.0	EC002719
ETIM 7.0	EC002719
UNSPSC 16.0901	39121528

Connection diagram

Cd-087

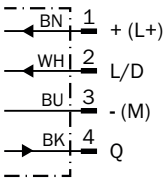

Characteristic curve

VTB18V

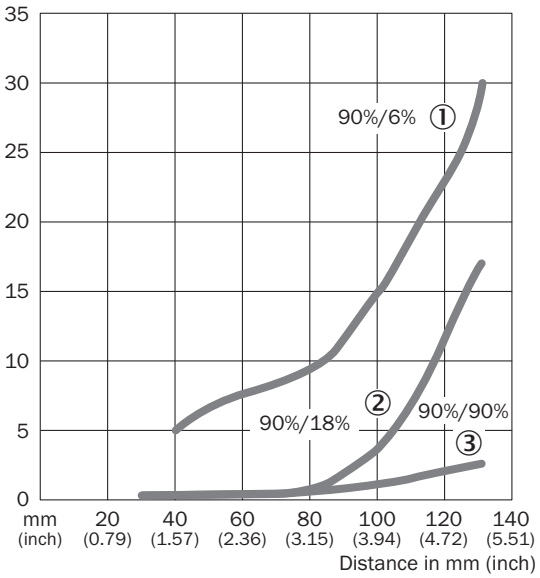

① Sensing range on black, 6% remission
② Sensing range on gray, 18 % remission
③ Sensing range on white, 90% remission

Adjustments

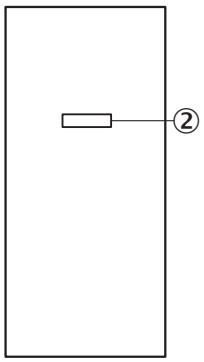

② Sensing range adjustment: Touch-Teach-In

Dimensional drawing (Dimensions in mm (inch))

VTB18V

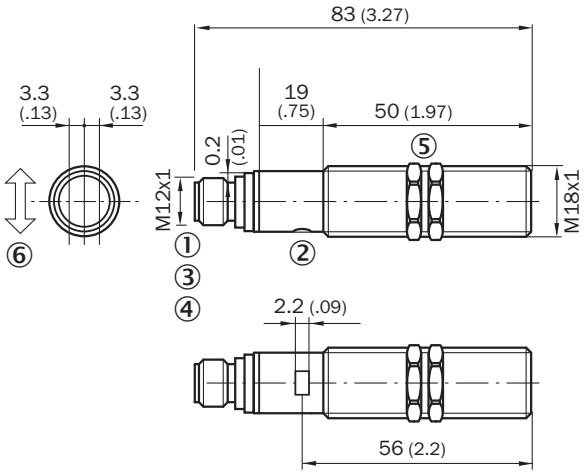

① M12 male device connector, 4-pin
② Sensing range adjustment: Touch-Teach-In
③ Status indicator LED, green: signalizing Touch-Teach-in
④ LED indicator yellow: Status of received light beam
⑤ Fastening nuts (2 x); width across 24, stainless steel
⑥ Standard direction of the material being detected

Recommended accessories

Other models and accessories ➜ www.sick.com/V18V

	Brief description	Type	Part no.
Plug connectors and cables			
	Head A: female connector, M12, 4-pin, straight Head B: Flying leads Cable: Sensor/actuator cable, PVC, unshielded, 5 m This product is generally resistant to chemical cleaning agents (see ECOLAB). Please do not use cleaning agents of any other Kind., Not resistant against lactic acid & hydrogen peroxide (H2O2)	DOL-1204-G05MNI	6052615

SICK AT A GLANCE

SICK is one of the leading manufacturers of intelligent sensors and sensor solutions for industrial applications. A unique range of products and services creates the perfect basis for controlling processes securely and efficiently, protecting individuals from accidents and preventing damage to the environment.

We have extensive experience in a wide range of industries and understand their processes and requirements. With intelligent sensors, we can deliver exactly what our customers need. In application centers in Europe, Asia and North America, system solutions are tested and optimized in accordance with customer specifications. All this makes us a reliable supplier and development partner.

Comprehensive services complete our offering: SICK LifeTime Services provide support throughout the machine life cycle and ensure safety and productivity.

For us, that is “Sensor Intelligence.”

WORLDWIDE PRESENCE:

Contacts and other locations –www.sick.com