BRYANT CONTROL INC.
2933 N. WEBSTER AVE.
INDIANAPOLIS, IN 46219

www.bryantcontrol.com

PHONE (317)549-3355
(800)234-2857
FAX (317)542-8154

SCHEMATIC

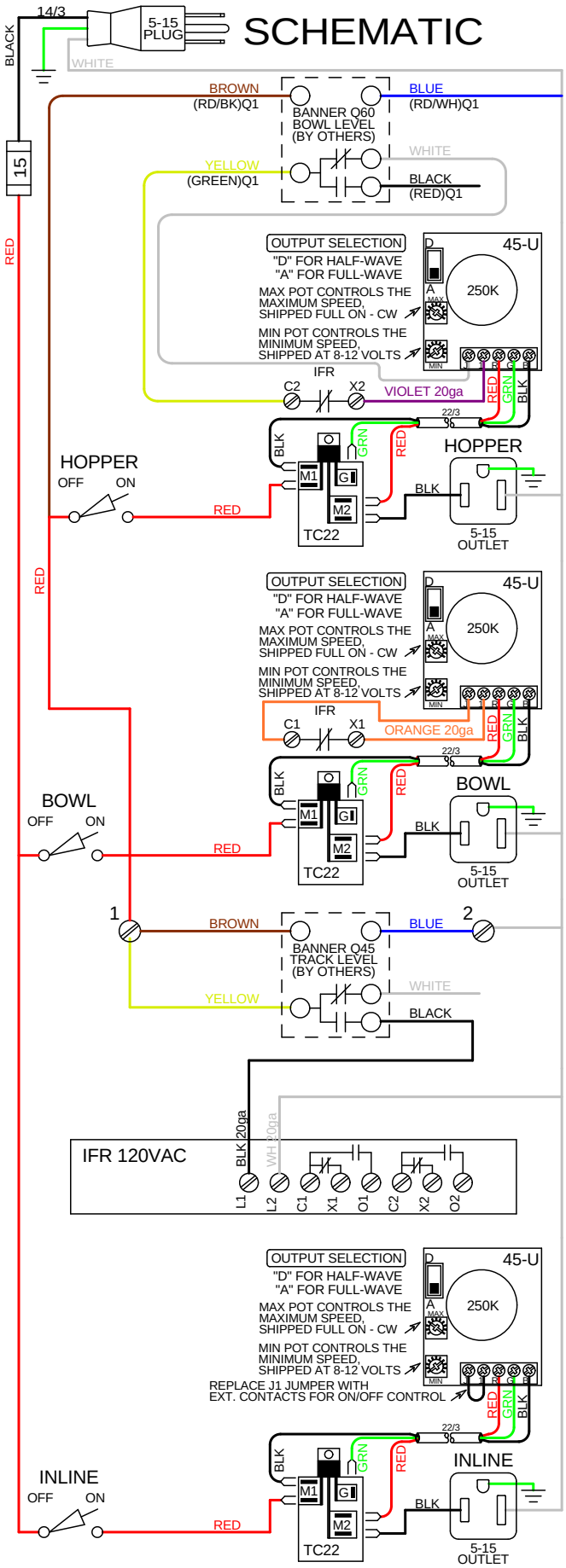

ALL WIRING 14ga UNLESS OTHERWISE NOTED

MODEL# ET15YRY	12-9-15 REV: A
15AMP / 115VAC, 50/60Hz	MH7 ENCLOSURE (NEMA 1)

ITEM DESCRIPTION	SERVICE PART #
HOPPER CONTROL	C150 (includes 45U and TC22)
BOWL CONTROL	C150 (includes 45U and TC22)
INLINE CONTROL	C150 (includes 45U and TC22)
120VAC INTERFACE RELAY	IFR120AC

NOTES: 2 Pole Term. Block, Q45 and Q60 Sensors by others

