BRYANT CONTROL INC.
2933 N. WEBSTER AVE.
INDIANAPOLIS, IN 46219

www.bryantcontrol.com

PHONE (317)549-3355
(800)234-2857
FAX (317)542-8154

DC300 - DATA SHEET

DC SENSOR TIMING BOARD (NPN OR PNP INPUT)

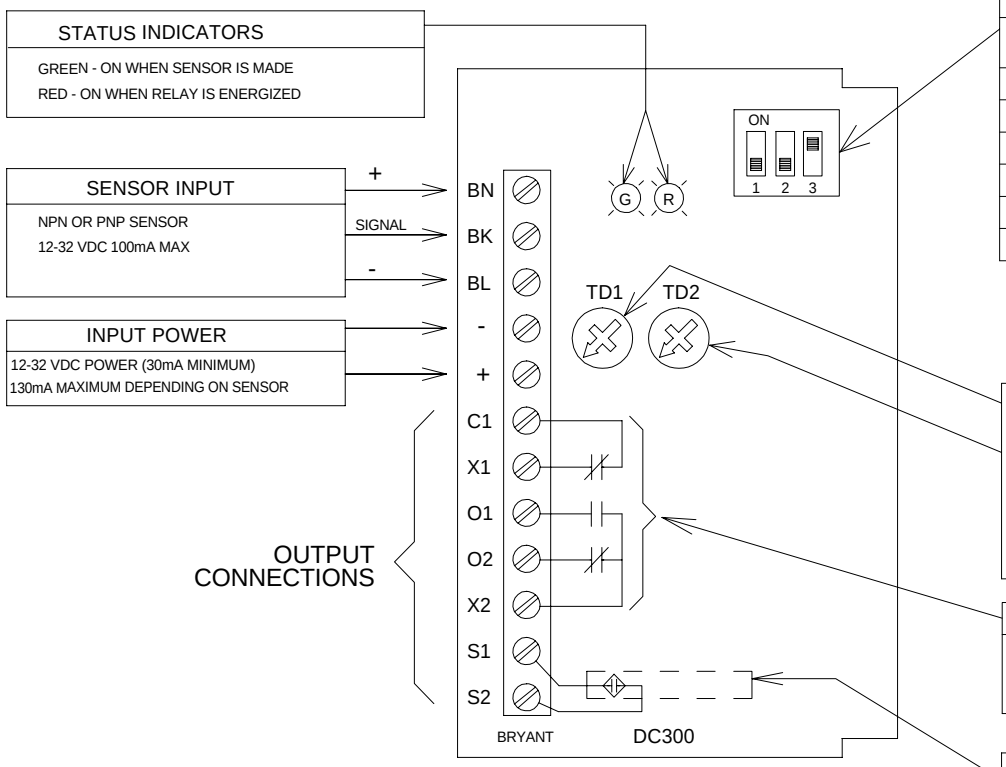

PROGRAM SWITCHES				
SWITCH POSITION 1	2	3	MODE	POT(S) ACTIVE
↓	↓		ON & OFF DELAY	BOTH
↓	↑		ON DELAY ONLY	TD-1
↑	↓		OFF DELAY ONLY	TD-2
↑	↑		ONE SHOT	TD-2
		↓	REVERSE INPUT	
		↑	NORMAL INPUT	

TD1 - ADJUSTS THE TIME BEFORE OUTPUT RELAY ENERGIZES TO SHUT OFF FEEDER

TD2 - ADJUSTS THE TIME FOR THE OUTPUT RELAY TO DE-ENERGIZE AND TURN FEEDER BACK ON AGAIN

BOTH ARE SHOWN IN THE POSITION AS SHIPPED FROM THE FACTORY (.1 SECOND)

BOTH ARE ADJUSTABLE FROM .1-10 SECONDS

RELAY OUTPUT (0.5AMP 250VAC MAX RESISTIVE)

C1 - X1 NORMALLY CLOSED

X2-COMMON O2-NORMALLY CLOSED O1-NORMALLY OPEN

OPTIONAL SOLID STATE RELAY OUTPUTS

DC300-1 1AMP 230VAC MAX SOLID STATE RELAY

DC300-D 1AMP 12VDC SOLID STATE RELAY

DC300-L 12VDC TRANSISTOR S2 [REF. TO BOARD'S -]