RODIX INC.
FEEDER CUBE®
VF SERIES CFR SENSOR
CONSTANT FEED RATE
® P/N 123-215

1. INSTALLING THE CFR SENSOR

Note: Failure to adequately prepare the feeder's surface properly may result in a Constant Feed Rate (CFR) sensor that will not bond to the feeder. The sensor should not be mounted until step C-6.

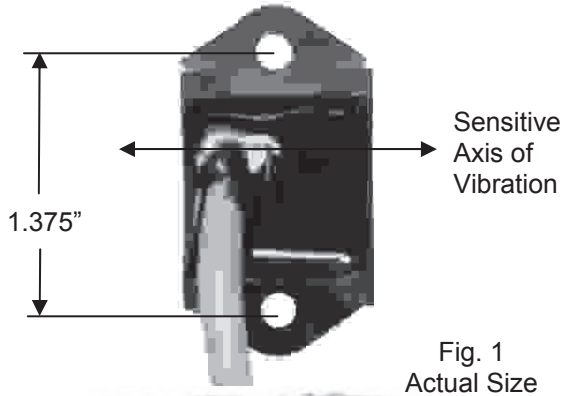

Fig. 1
Actual Size

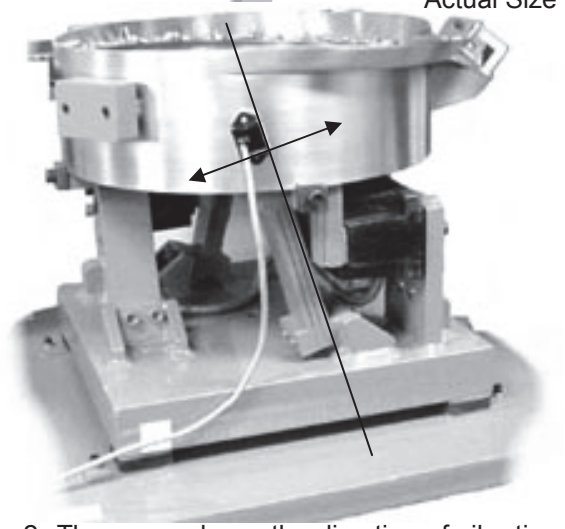

Fig. 2 The arrow shows the direction of vibration which is at a right angle to the spring pack.

A. ORIENT THE SENSOR so that its sensitive axis is in the same direction as the vibration of the feeder. The double-ended arrow in figure 1 shows the sensor's sensitive axis. Align the sensitive axis of the sensor in the same direction as the vibration (see figure 2). The sensor must be oriented correctly for proper operation.

B. CHOOSE A LOCATION for mounting the sensor on the feeder that is smooth and that will allow the adhesive on the sensor to bond. Avoid mounting the sensor over ridges and bumps which can reduce the ability of the adhesive to stick to the feeder. The correct location will also have enough space for the sensor's cable to hang straight down without touching anything else.

C. SURFACE PREPARATION of the feeder is crucial for proper bonding between the sensor and the feeder. Please follow these steps completely.

1) The feeder should be kept between 70° and 100° F for ideal tape application.
2) Clean a three and one-half inch circular area with a solvent like isopropyl alcohol that will not leave a residue. As a rule of thumb, the area can be considered clean when after cleaning the area with a solvent-saturated, white paper-towel, the towel is as clean as it was before wiping.
3) Using a good amount of pressure, polish the cleaned, circular area of the feeder using a scratch pad or steel wool. Repeat step 2, and then go to step 4.
4) Wipe the cleaned surface with an alcohol wipe or with a 50/50 isopropyl alcohol/water combination.
5) Dry the surface thoroughly using a low lint cloth or a clean paper towel.
6) Remove the vibration sensor from its protective packaging. Remove the liner from the adhesive backing. Avoid touching the tape. Align the sensor as shown in figures 1 and 2. Apply the vibration sensor to the prepared area of the feeder. Press the sensor very firmly onto the feeder surface for at least 10 seconds.
7) Allow the vibration sensor at least 20 minutes to cure before operation. Note: It takes 72 hours for the adhesive to fully cure at 70° F.

Alternatively, #8 or M4 screws can be used to mount the sensor to the feeder. The mounting holes are 1.375" apart.

D. ROUTE THE SENSOR CABLE to protect it from strain due to vibration. The cable that attaches to the sensor will not break from normal vibration; however, some care should be used when routing the sensor cable from the sensor to the control. The cable should hang straight down from the sensor without touching the feeder bowl or anything else. Then, the sensor cable should curve towards the power control with a bend radius larger than 3 inches.

Use a cable tie and an adhesive-backed mount to attach the sensor cable to the side of the drive base. See Figure 2. Clean the mounting area before applying the adhesive-backed mount.

E. CONNECT THE SENSOR to the control. If needed, connect the sensor cable's brown wire to "+ACCEL" on TB2. The blue wire connects to the "–ACCEL" on TB2.

F. SELECT THE SENSOR in the software settings of the control menu. See the Control Menu Layout page for a visual layout of the program menu.

1) Press and hold the "Enter" key to enter the main menu.
2) With "Power Settings" displayed, press the "Enter" key to get into the submenu.
3) Arrow "Down" to select the "Amplitude Source" submenu.
4) Press the "Enter" key, and Arrow "UP" to select "Auto Tracking" from the adjustments.
5) Press the "Back" key twice to get back to the main menu.
6) Next, arrow "Down" to the "Frequency Settings" selection.
7) Press the "Enter" key to get into the submenu.
8) Arrow "Down" to select the "Frequency Mode" submenu.
9) Press the "Enter" key, and Arrow "UP" to select "Auto Tracking" from the adjustments.
10) Press the "Back" key three times to get back to the normal running display.

G. PERFORM AUTO SCAN of the vibratory feeder. See the Control Menu Layout page for a visual layout of the program menu.

1) Press and hold the "Enter" key to enter the main menu.
2) Arrow "Down" to select the "Frequency" submenu.
3) Press the "Enter" key, and Arrow "UP" three times to select "Auto Scan" from the adjustments.
4) Press the "Enter" key to perform an automatic frequency scan.

© 2005 RODIX INC.

RODIX, INC.
2316 23rd Ave., Rockford, IL 61104
Toll Free (800) 562-1868, FAX (815) 316-4701
E-mail custserve@rodix.com
www.rodix.com