BRYANT CONTROL, INC 2933 N WEBSTER AVE INDPLS, IN 46219 317/549-3355 800/234-2857 FAX 317/542-8154

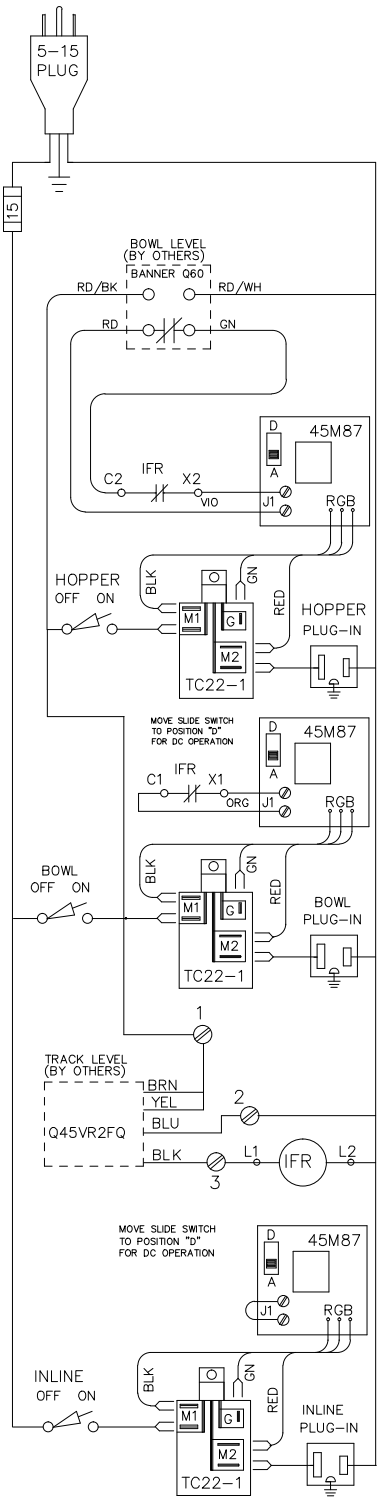

MODEL NUMBER	ET15RY
CONTROL 1	HOPPER
CONTROL 2	BOWL
CONTROL 3	INLINE
CONTROL BOARD	
SENSOR	
AMPS/VOLTAGE	15A/115V50/60Hz

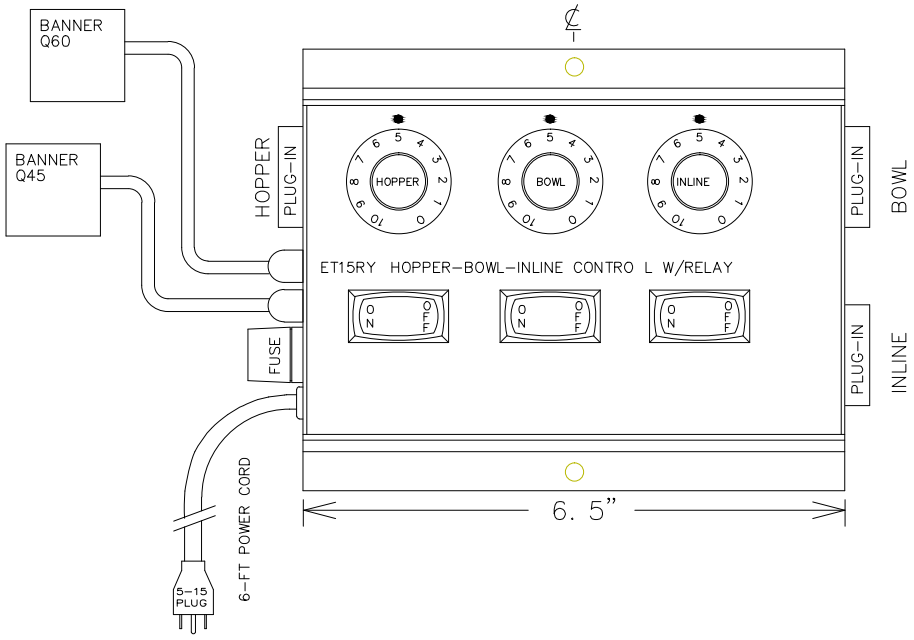

SERVICE PARTS

C150 SERVICE KIT FOR COMPLETE REPAIRS
ON ANY FEEDER CONTROL

IFR120AC 120VAC INTERFACE RELAY

30-050RY