RODIX INCORPORATED

2303 23rd Ave., ROCKFORD IL 61104
TOLL FREE (800) 562-1868, FAX (815) 316-4601
E-mail custserve@rodix.com
www.rodix.com

FEEDER CUBE®

FC-90-3 *Plus* PARTS SENSING

GENERAL PURPOSE MODEL
IMPORTANT: APPLICATION NOTE



RODIX INC.
FEEDER CUBE®
FC-90 *Plus Series*
GENERAL PURPOSE



Model - FC-90-3 *Plus*
P/N 121-000-8220

c UL us
Listed, File No. E183233

Input: 120 VAC, 50/60 HZ.
Triple Unit Fuse Sizes:
Main 15 Amps Maximum
Unit A = 10 AMPS
Unit B = 15 AMPS
Unit C = 5 AMPS
Output: 0-120 VAC
80% Duty Cycle at Rated AMPS

© 2000, 2009 RODIX INC.

ADJUSTMENTS & SET UP UNITS A, B & C

1. SELECT THE PULSE SETTING

Match the control's pulse mode to the feeder's tuning:

A. For 60 pulse output - Set DIP switch (S1) to 60 on the circuit card.
B. For 120 pulse output - Set DIP switch (S1) to 120 on the circuit card.
C. For 40, 30, 15 or 60 Reverse pulse settings, see the "S1 Programming Chart."

Note: Readjust the MAX trimpot after changing pulse switch setting.

2. INSTALLING THE PART SENSOR

(Photo-sensor or Proximity Switch)

A. Connect a three wire, current-sinking (NPN) or current-sourcing (PNP) sensor as shown on the enclosed wiring diagram. The sensor must be able to operate on 12VDC and be capable of switching at least 3.0 mA. Set switch (S1) to NPN or PNP according to the sensor's output type.

B. Set DIP switch (S1) for the proper logic. When the switch is in the "NORM" position, the control will run only when the sensor signal is present. The "NORM" position is used with Light-Operate photoeyes (through beam). When switch (S1) is in the "INV" position, the control runs only when the sensor signal is not present. The "INV" switch position is used with Dark-Operate, (reflective) photoeyes and Proximity Sensors.

3. RUN JUMPER INPUT

The Run Jumper Input comes jumped from the factory. If the Feeder Cube® will be controlled by a relay contact, switch, or other device, replace the factory-installed jumper with the controlling "Run Contact" at terminals 8 and 9 of TB2. The contact must be able to switch 12VDC and 3.0 mA. The control will then run only when the contact is closed and the part sensor is calling for parts.

If the Feeder Cube® will be controlled by a PLC or something similar, connect (+) voltage to TB2-8 and (–) voltage to TB2-7. If electrical isolation is desirable, remove R3 located on the circuit board near TB2-8.

In the High/Low parts sensing mode, a second parts sensor can be connected to the run input in place of the run jumper. The parts sensor must be a PNP sensor. Both sensors must use the same light-operate or dark-operate logic.

4. LIMITING THE MAXIMUM OUTPUT OF CONTROL

The **MAX** output trimpot can be adjusted to limit the maximum vibration level of the vibratory feeder when the Main Control Dial is fully turned up. When setting up the MAX output of the feeder control, the output wiring to feeder must be connected and the control set for the proper pulse (60 or 120) setting. The Run Jumper input must be closed, and the Part Sensor must be calling for parts.

A. Power input should be **OFF** or disconnected.
B. Open cover to allow access to circuit card.
C. Adjust the **MAX** Output trimpot counter-clockwise to its minimum setting.
D. Using **CAUTION**, turn power **ON** (no output should be present).
E. Rotate the **MAIN CONTROL DIAL** on front cover clockwise to its highest setting.
F. Adjust the **MAX** Output trimpot so that the output to the feeder reaches its desired maximum level.

5. SETTING THE MINIMUM OUTPUT LEVEL OF CONTROL

When the vibratory feeder is nearly empty, turn the **MAIN CONTROL DIAL** to "1" and adjust the **MIN** trimpot to just below the slowest speed that provides the proper feed rate. The MIN trimpot also serves as the "low speed" trimpot for 2-speed operation. See "S1 Programming Chart."

6. MAIN CONTROL DIAL

The output power is controlled by the **MAIN CONTROL DIAL**. A special logarithmic-tapered power out curve (non-linear) spreads the power broadly across the **MAIN CONTROL DIAL** to help give maximum "Fine Control" over the output speed of the vibratory feeder. When very precise adjustment of the **MAIN CONTROL DIAL** is needed, increase the MIN trimpot setting and/or decrease the MAX trimpot setting. A linear POT taper can be selected when operating the feeder at lower voltages. To select a linear pot taper for the Main Control Dial, see the "S1 Programming Chart."

7. FEEDER BOWL/HOPPER INTERLOCK OUTPUT

The Feeder Bowl/Hopper Interlock feature (TB2-2 & 3) can be connected to a Rodix FC-40 *Plus* Series (TB2-11 & 12) control or another FC-90 *Plus* Series (TB2-7 & 8) control when control of a bulk material hopper is needed. The bowl/hopper interlock will prevent the hopper from operating anytime the bowl is turned OFF or in "STAND BY" mode. The Auxiliary Interlock output can also be used to drive a solid state relay or a low wattage 12VDC air valve. A solid state relay can operate any auxiliary equipment such as a light stand or an air valve. The Auxiliary output is capable of switching 70 mA if an external power source is used. The logic of the Aux. output can be changed through the settings of S1. Some other features for the Aux output are: Aux invert; bowl out of parts with alarm; and an air jet sequence for starting air before feed and stopping the air after feeding.

8. SETTING THE TIME DELAYS

The sensor time delays can be set for independent OFF delay and ON delay periods. The time delay trimpots can be adjusted to provide the best individual response for the feeder (0 to 12 seconds). By rotating the adjustment clockwise, the delay will become longer.

9. SETTING THE SOFT-START

The start-up of the control output can be adjusted to ramp up to the desired output level instead of starting abruptly. Soft-start keeps parts from falling off the tooling, reduces spring shock, and hammering when the control turns ON. Turn the **SOFT** Start trimpot clockwise for the gentlest start (about a 6 sec. ramp up to full output). Turn the trimpot fully counter-clockwise for no soft start.

10. POWER SUPPLY

At the rated line voltage, the power supply is capable of providing a combined total current of 100 mA at 12 VDC (40mA at 200VAC line on 240V models). The total current includes the sensor and any auxiliary output accessories that are connected to the Bowl/Hopper Interlock output terminals.

11. REMOTE SPEED CONTROL

Remote control of the power level can be accomplished by the following methods:

A. 4-20mA signal from a PLC can be used to remotely vary the output of the control instead of the Main Control Dial. Set S1 to the 4-20 position. The 4-20mA input is automatically in control ON whenever a 4-20mA signal is applied to the control (terminals TB2-11 & 12). The Main Control dial setting is ignored whenever there is a 4-20mA signal. The 4-20mA input is transformer isolated from the power line. See "S1 Programming Chart" for 0-20mA.

B. 0-5VDC Analog input signal may be applied in place of the Main Control Dial.

C. A Constant Feed Rate (CFR) sensor can be added for closed loop feeder amplitude regulation. Switch S1 needs to be set to CFR.

12. LINE VOLTAGE COMPENSATION

Fluctuations in the line voltage can cause a feeder bowl to vary its feed rate. The line voltage compensation feature adjusts the control's output to help compensate for fluctuations in the supply voltage. If it becomes necessary to disable this feature, set LVC (S1) right to disable compensation.

13. INSTALLING THE CFR SENSOR

Note: Failure to adequately prepare the feeder's surface properly may result in a Constant Feed Rate (CFR) sensor that will not bond to the feeder. The sensor will not be mounted until step C-6.

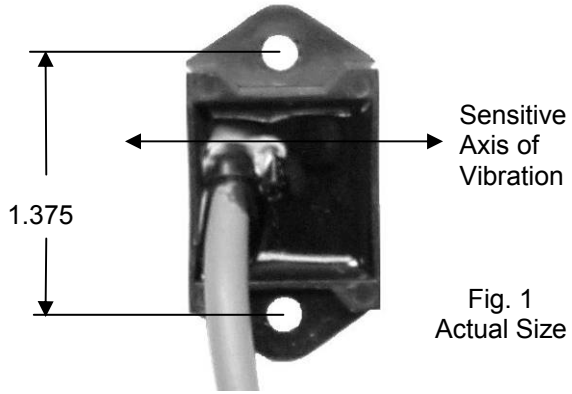

Fig. 1
Actual Size

A. ORIENT THE SENSOR so that its sensitive axis is in the same direction as the vibration of the feeder. The double-ended arrow in figure 1 shows the sensor's sensitive axis. Align the sensitive axis of the sensor in the same direction as the vibration (see figure 2). The sensor must be oriented correctly for proper operation.

B. CHOOSE A LOCATION for mounting the sensor on the feeder that is smooth and that will allow the adhesive on the sensor to bond. Avoid mounting the sensor over ridges and bumps which can reduce the ability of the adhesive to stick to the feeder. The correct location will also have enough space for the sensor's cable to hang straight down without touching anything else.

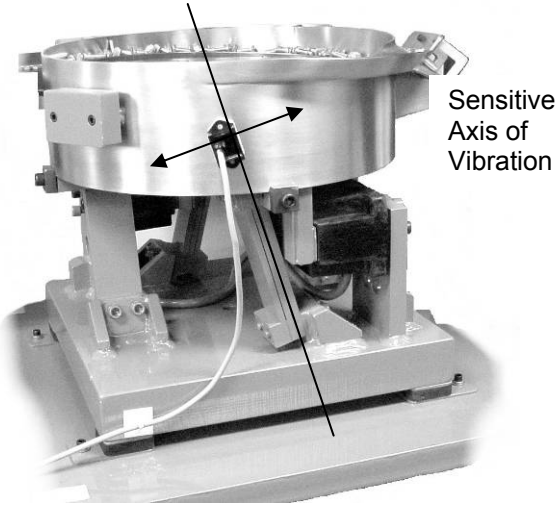

Fig. 2 The arrow shows the direction of vibration which is at a right angle to the spring pack.

C. SURFACE PREPARATION of the feeder is crucial for proper bonding between the sensor and the feeder. Please follow these steps completely.

1) The feeder should be kept between 70° and 100° F for ideal tape application.
2) Clean a three and one-half inch circular area with a solvent like isopropyl alcohol that will not leave a residue. As a rule of thumb, the area can be considered clean when after cleaning the area with a solvent-saturated, white paper-towel, the towel is as clean as it was before wiping.
3) Using a good amount of pressure, polish the cleaned, circular area of the feeder using a scratch pad or steel wool. Repeat step 2, and then go to step 4.
4) Wipe the cleaned surface with an alcohol wipe or with a 50/50 isopropyl alcohol/water combination.
5) Dry the surface thoroughly using a low lint cloth or a clean paper towel.

6) Remove the vibration sensor from its protective packaging. Remove the liner from the adhesive backing. Avoid touching the tape. Align the sensor as shown in figures 1 and 2. Apply the vibration sensor to the prepared area of the feeder. Press the sensor very firmly onto the feeder surface for at least 10 seconds.
7) Allow the vibration sensor at least 20 minutes to cure before operation. Note it takes 72 hours for the adhesive to fully cure at 70°F.

Alternatively, #8 or M4 screws can be used to mount the sensor to the feeder. The hole centers are 1.375" apart.

D. ROUTE THE SENSOR CABLE to protect it from strain due to vibration. The cable that attaches to the sensor will not break from normal vibration; however, some care should be used when routing the sensor cable from the sensor to the control. The cable should hang straight down from the sensor without touching the feeder bowl or anything else. Then, the sensor cable should curve towards the power control with a bend radius larger than 3 inches.

Use a cable tie and an adhesive-backed mount to attach the sensor cable to the side of the drive base. See Figure 2. Clean the mounting area before applying the adhesive-backed mount.

E. CONNECT THE SENSOR to the control. The sensor's brown wire connects to +12VDC at TB2-9. The blue wire connects to the signal input at TB2-12.

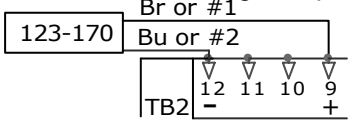

14. SUPPLEMENTARY FEATURES

Special supplementary software features can be enabled on the 24-490/24-491 circuit boards The features include: *Constant Feed Rate* regulation (CFR vibration feedback sensor required), *Constant On*, *High/Low Track* level control, *60 pulse polarity reversal, low pulse rate, linear pot taper, bowl out of parts,* and *two speed pots*. See the S1 Switch Programming Chart. For more feature information download (or request from RODIX) the FC-90 ***Plus Series*** Advanced Application Note.

15. STATUS LEDs

When the Sensor input is active, either the NPN or the PNP LED will be ON. When the RUN input circuit is complete, the RUN LED will be ON. Whenever the Aux output is turned ON, the AUX LED is ON.

WARNING:

Fuses should be replaced with Littelfuse 3AB "Fast Acting" type or equivalent of manufacturer's original value.

Mounting this control on a vibrating surface will void the warranty.

WARRANTY

Rodix Control Products are Warranted to be free from defects in material and workmanship under normal use for a period of two years from date of shipment. For the full description of the warranty, terms, and software license, please contact the factory.

For assistance installing or operating your Rodix Feeder Cube® please call the factory or visit our web site. Technical help is available to answer your questions and fax any needed information. To return a control for IN or OUT of warranty service, please ship it prepaid to:

Rodix Inc., ATTN: Repair Department

If under warranty, Rodix will repair or replace your control at no charge; If out of warranty, we will repair it and you will be billed for the repair charges (Time and Material) plus the return freight. Quotes for repairs are available upon request. A brief note describing the symptoms helps our technicians address the issue.

Feeder Cube® is a registered TM of Rodix Inc.

Banner® is a registered Trademark of Banner Engineering Corp, 9714 10th Ave, Minneapolis, MN 55441

DIMENSIONS

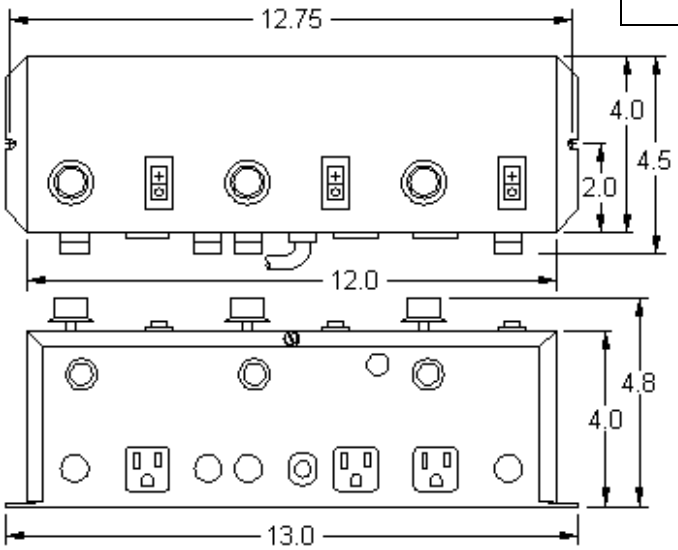

S1 Programming Chart					
Program Description	S1 Switch Positions				
0 = Off 1 = On	SW 6	SW 7	SW 8	SW 9	SW 10
Standard Program	0	0	0	0	0
Constant ON	0	0	0	0	1
High/Low Track	0	0	0	1	0
Linear Pot Taper	0	0	0	1	1
0-20mA	0	0	1	0	0
2-Speed Operation	0	0	1	0	1
Bowl Out Parts, Stop	0	0	1	1	0
BOP stop/ with alarm	0	0	1	1	1
BOP alarm w/o stop	0	1	0	0	0
30/15 hertz operation	0	1	0	0	1
Aux Invert	0	1	0	1	0
Air Jet Timers	0	1	0	1	1
40 Pulse operation	0	1	1	0	0
Optional Program	0	1	1	0	1
Optional Program	0	1	1	1	0
Optional Program	0	1	1	1	1
Waveform Reversal	1	0	0	0	0
Constant ON, WR	1	0	0	0	1
High/Low Track, WR	1	0	0	1	0
Linear Pot Taper, WR	1	0	0	1	1
0-20mA, WR	1	0	1	0	0
Optional Program	1	0	1	0	1
Optional Program	1	0	1	1	0
Optional Program	1	0	1	1	1

RODIX, INC.
2303 23rd Ave., Rockford, IL 61104
Toll Free (800) 562-1868, FAX (815) 316-4701
E-mail custserve@rodix.com
www.rodix.com

RODIX INC.
FEEDER CUBE®
RODIX SOLUTION
.408

RODIX SOLUTION

Good wiring practices for avoiding electrical noise problems.

Rodix controls have been designed with a high degree of immunity to electrical noise; however, depending on the control installation, electrical noise can cause problems. These problems occur in less than 1% of the product installations. Most electrical noise problems can be avoided by following some simple guidelines. Good wiring practices need to be used to prevent electrical noise from interfering with your control's operation. Another name for electrical noise is Electro-Magnetic Interference (EMI).

Symptoms of Electrical Noise

The symptoms of electrical noise would appear as follows: a brief pause or a brief "bump" in the vibratory feeder's output that the control automatically recovers from. In rare cases the control will either stop operating or run continuously at full power in 120 pulse mode until the power switch is slowly cycled OFF and ON.

Sources of Electrical Noise

Electrical noise is generated by devices like relay coils, solenoid valves, contactors, servo motors, and variable frequency inverter drives. The electrical noise is then transferred to another device by one of three ways. The noise could be conducted through the power wires, or capacitively coupled from wire to adjacent wire, or it is transmitted from the wires of a noise source.

Solutions for Electrical Noise

1. Use shielded wires for all I/O (Input / Output) signals. The I/O signals may include: 4-20mA input, Run input, Sensor input, 0-5VDC input, Interlock input or AUX output. The shield "drain" wire should be tied to the chassis in the Rodix control. The drain wire should be kept shorter than 2". Please see the enclosed picture.

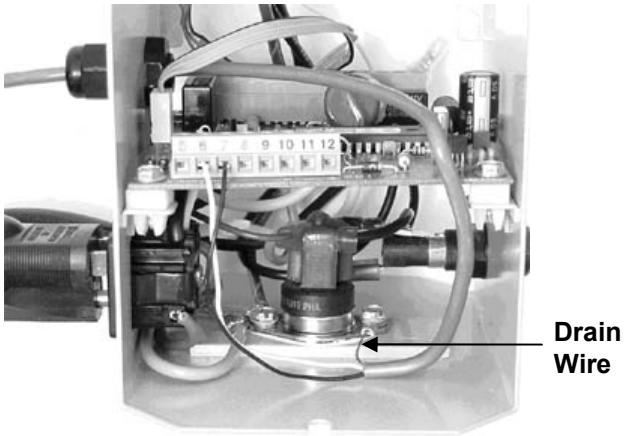

Example of a "drain" wire termination

2. Never run I/O signal wires in the same conduit or raceway as AC power lines such as wires to motors, solenoids, heaters, welders and Rodix controls, etc.

3. I/O wires within an enclosure should be routed as far away as possible from relays, solenoids, transformers, power wiring and other noisy equipment. Keep the I/O signal wires separate from the control's input and output power wiring. Secure the wires in place.

4. Whenever relays or solenoid valves are used, install a Snubber on them to reduce electrical noise. Use a diode on a DC coil. Use a RC Snubber on an AC coil.

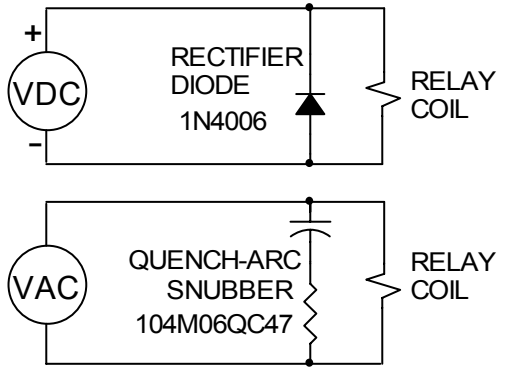

5. In extremely high EMI environments, Power Line Filters and ferrite beads can be effective. Install ferrite beads on I/O signal wires as close as possible to the circuit board terminal strip. Loop the wire through the bead several times or use several beads on each wire for additional protection.

RODIX, INC.
2303 23rd Avenue, Rockford, IL 61104
Toll Free (800) 562-1868, FAX (815) 316-4701
E-mail custserve@rodix.com
www.rodix.com

© 2000, 2010 RODIX INC. Solution 408 1/27/2010

RUN JUMPER INPUT
P/N 24-490/24-491

A) LOW CURRENT SWITCH

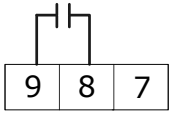

FC-90 PLUS SERIES TB2

B) BOWL/HOPPER INTERLOCK

FC-90 PLUS SERIES TB2, OUTPUT

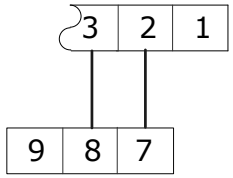

FC-90 PLUS SERIES TB2, INPUT

C) LOW VOLTAGE INPUT SWITCHING
(DC Voltage from PLC)

5-30 VDC INPUT VOLTAGE OFF/ON CONTROL

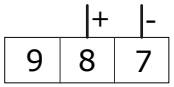

FC-90 PLUS SERIES TB2

RODIX INC.
FEEDER CUBE®
FC-90 *Plus Series*
WIRING DIAGRAM

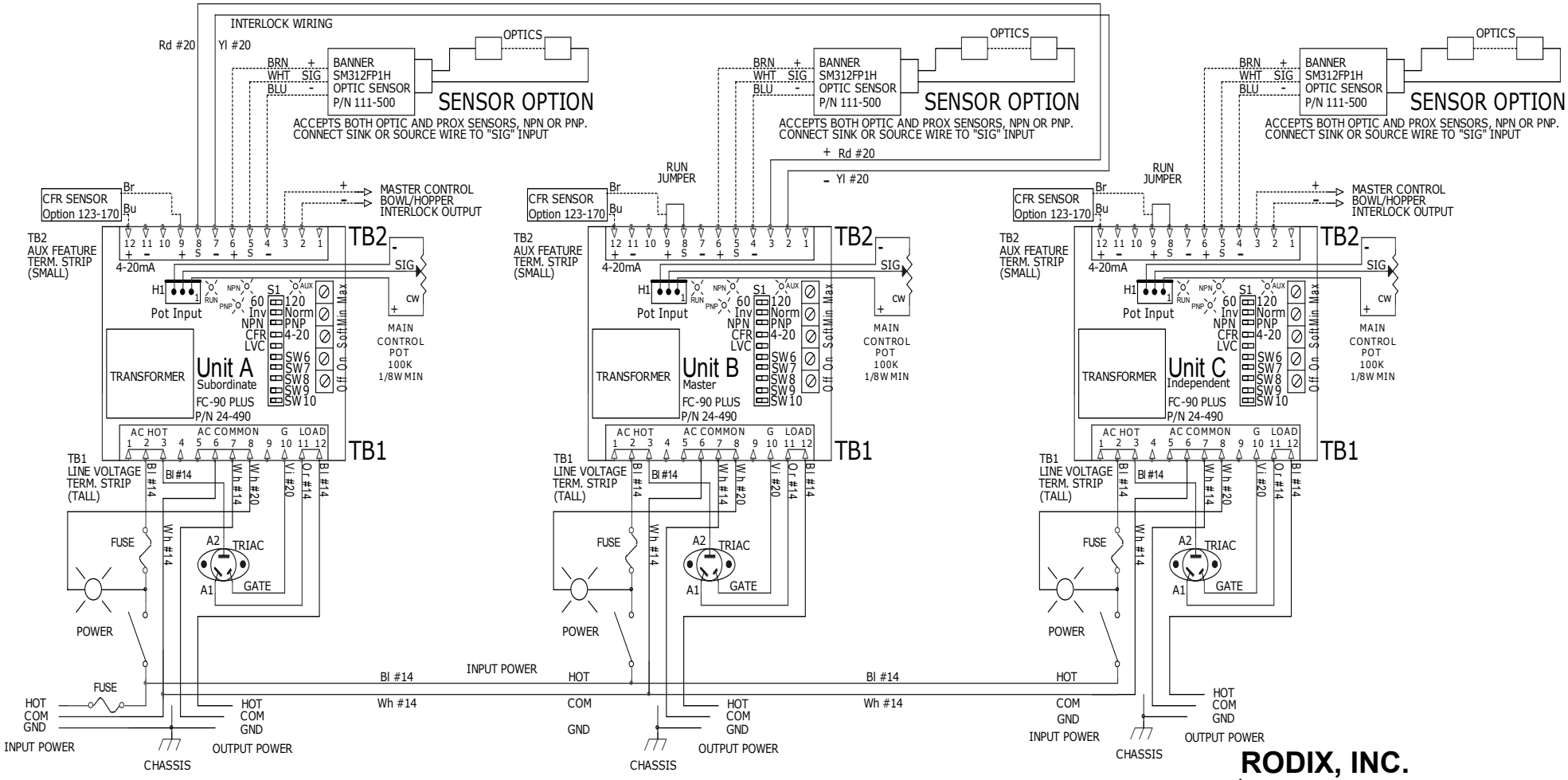

MODEL	INPUT VAC	MAIN	AMPS	OUTPUT
FC-90-3 PLUS	120 VAC	15	10/15/5	0-120

RODIX, INC.
2303 23rd Ave., Rockford, IL 61104
Toll Free (800) 562-1868, FAX (815) 316-4701
Email custserve@rodix.com
www.rodix.com