Digital Fiber Optic Sensors

FS-N Series Setting Guide

For precautions and operation details, refer to the instruction manual included with the product.



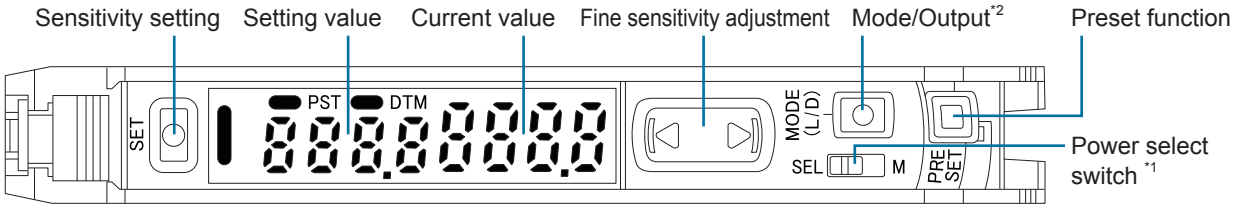

*1 This is a channel switch on 2-output types. This is not equipped with the 0-line type.
*2 Press and hold the [MODE] button to make advanced setting changes.

Calibration Method

Two-point Calibration

The value will be automatically set to the mid-point between when there is no workpiece and when there is a workpiece.

1 When there is no workpiece

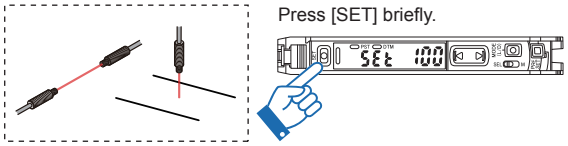

2 When there is a workpiece

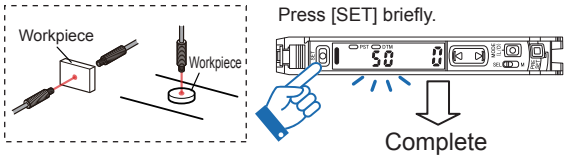

* When the difference is small., "----" is displayed.

Manual adjustment

The setting value can be finely adjusted manually.

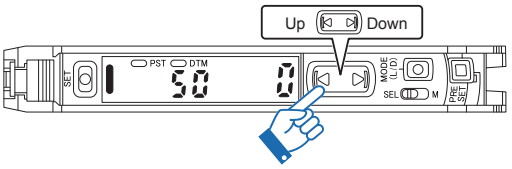

If the setting has become too complicated and you wish to start over...

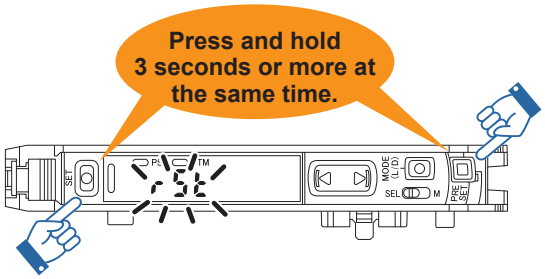

Initializing the Settings

1. **Press and hold the [SET] and [PRESET] buttons simultaneously for three seconds.**
2. **Use the to select "rSt", then press the [MODE] button.**
3. **Use the to select " in it", then press the [MODE] button.**
   After initialization is complete, the display returns to the current value.

Other Calibration Methods

Maximum Sensitivity Calibration

The value is set slightly higher than the received light intensity when the setting was made.
This is effective when light intensity is decreased due to dust and dirt.

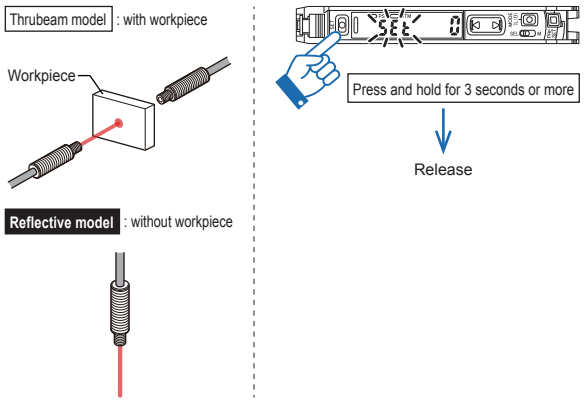

Full Auto Calibration

The sensitivity can be automatically set while passing the workpiece through.
This is effective when the line operation cannot be stopped.

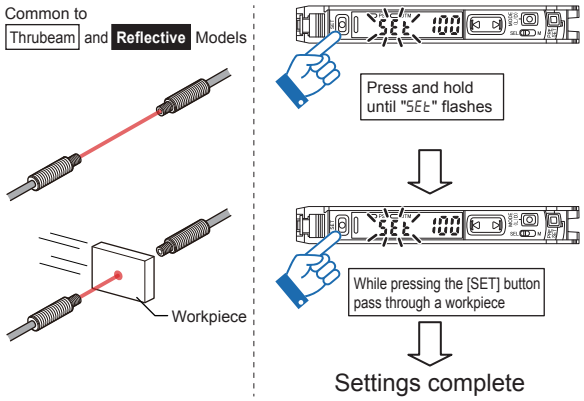

Positioning Calibration

This is effective when positioning the workpiece.

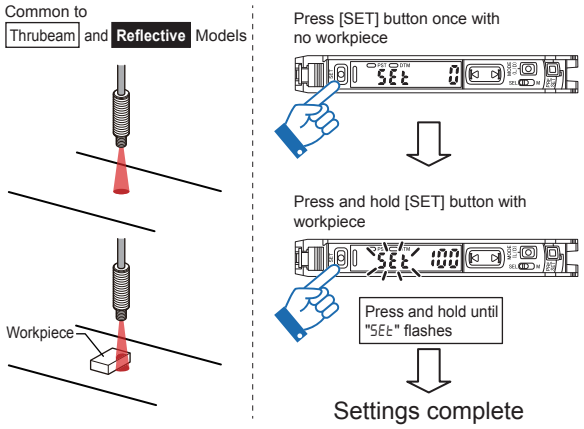

Preset

With simple operation, the current value is adjusted to "100.0" at the same time as when adjusting sensitivity.
This can remove variation in detected contents or variation due to individual difference, and is useful in predicting the need for maintenance.

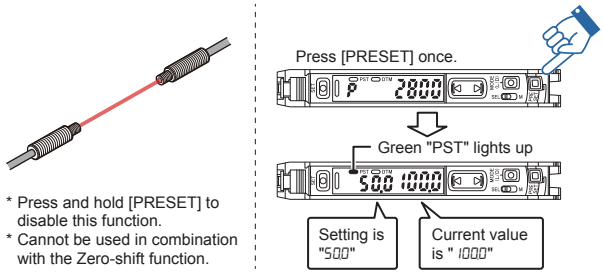

* Press and hold [PRESET] to disable this function.
* Cannot be used in combination with the Zero-shift function.

Work-Preset

The current value is corrected to 0.0. Arbitrary two points can be corrected to "100.0" and "0.0" by using this function in combination with the Preset function.

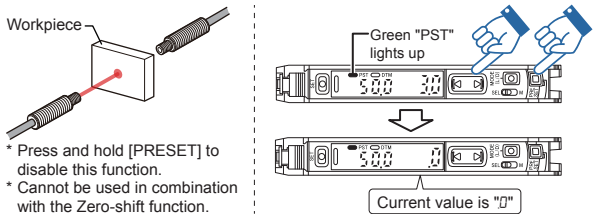

* Press and hold [PRESET] to disable this function.
* Cannot be used in combination with the Zero-shift function.

Maximum Sensitivity Preset

This function sets the reference condition to ".0" and correct conditions with the slightly higher light intensity to "100.0". This is effective when you wish to perform detection using the background as a reference with reflective models.

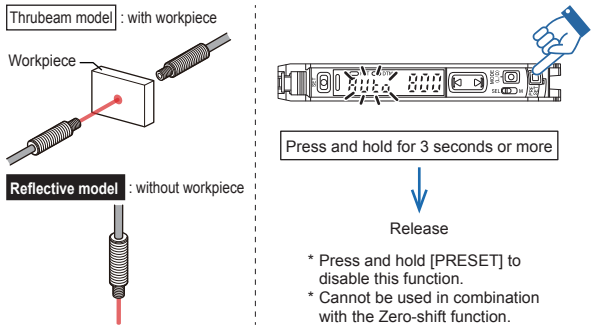

* Press and hold [PRESET] to disable this function.
* Cannot be used in combination with the Zero-shift function.

Full Auto Preset

The preset can be automatically made while passing the workpiece through. This is effective when the line operation cannot be stopped and you wish to use the preset.

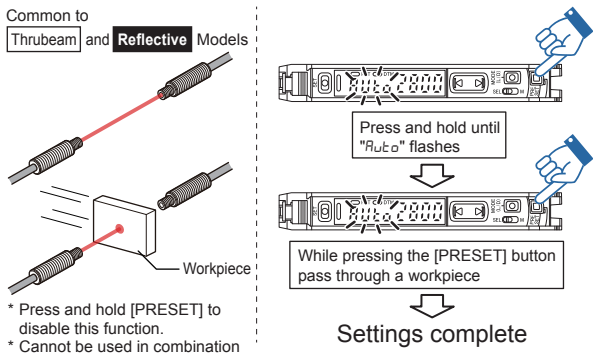

* Press and hold [PRESET] to disable this function.
* Cannot be used in combination with the Zero-shift function.

Convenient Correction Functions

Zero Shift

The current value can be corrected to "0".
This is effective when the light intensity is not set to "0" at the time when a reflective model is installed.

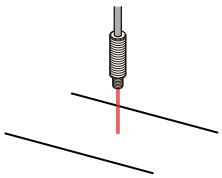

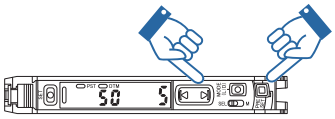

Press briefly at the same time.

* Press and hold [PRESET] to disable this function.
* Cannot be used in combination with the Zero-shift function.

Saturation Recovery Function

The light transmission level and light intensity sensitivity are automatically adjusted with simple operation.
This function is effective when the intensity value does not change (saturation) from the maximum value of the display-possible range in using the fiber unit at close range.

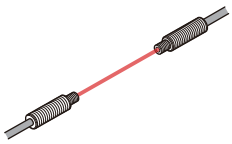

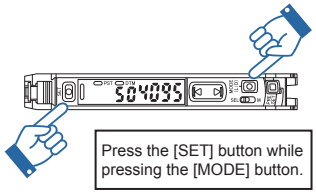

Press the [SET] button while pressing the [MODE] button.

* To disable this function, press [SET] while pressing [MODE].

Output Switch

Either light-ON (L-on) mode or dark-ON (D-on) mode can be selected.

1 While the current value is displayed, press the [MODE] button once.



2 Use ◁▷ to switch the output (L-on/d-on), then press the [MODE] button again.
The output change completes, and the display returns to the current value.

Keylock

Setting the Keylock

1 Press and hold [MODE] and ◁▷ at the same time for 3 seconds or more.
"Loc" is displayed, and button operation is disabled. Then, the current light intensity is displayed.

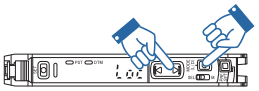

Canceling the Keylock

1 Press and hold [MODE] and ◁▷ at the same time for 3 seconds or more.
"unL" is displayed, and button operation is enabled.



Keylock with password

Setting the Keylock with password

1 While pressing [MODE], press ◁▷ 10 times.
"Loc 0" is displayed.



2 Press ◁▷ and set any numerical value (up to 4 digits).



3 Press [MODE].
"Loc" is displayed, and button operation is disabled. Then, the current light intensity is displayed.



Canceling the Keylock with password

1 While pressing [MODE], press ◁▷ 10 times.
"Loc 0" is displayed.



2 Press ◁▷ to specify a password, and press [MODE].
"unL" is displayed, and button operation is enabled.

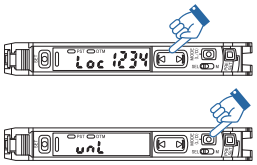

Detailed Settings

- To return to the normal screen, press and hold MODE while setting each item.
- To return to the previous screen, press MODE while pressing ◁.

Basic Settings

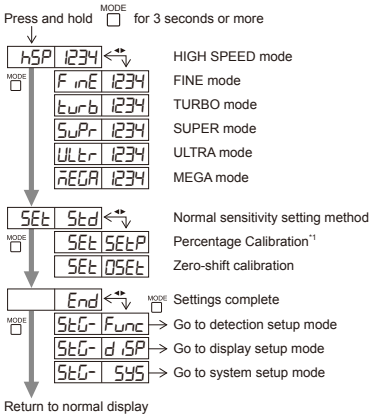

*1 You can press the MODE button to set between the range of -99P to 99P.

Detection Settings

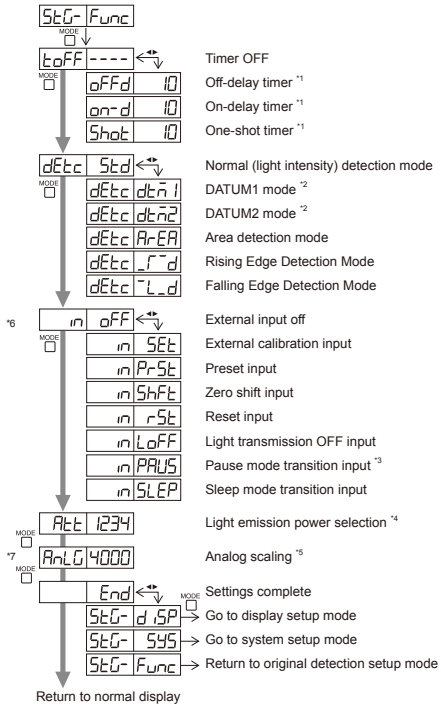

*1 Press the MODE button to set between the range of 1 and 9999(ms).
*2 Press the MODE button to set the retouch sensitivity to a range of between LEv1 and LEv3 and set the warning output level to a range of between 0P and 100P.
*3 Press the MODE button to toggle between oFF/on/KEEP.
*4 Can be set between the range of 1 and 100.
*5 Can be set between the range of 100 and 9999.
*6 Can be used only for the types with the external input.
Note that these functions can be used via communication when connecting with the network unit NU Series.
*7 Only monitor output types (FS-N11MN).

Display Settings

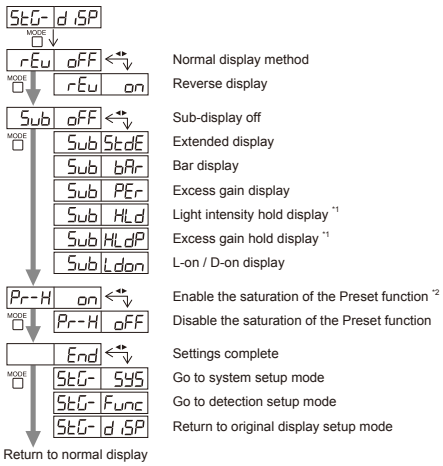

*1 Press the MODE button to toggle between Std/P-P_/b-b_/P_b-/P-b_.
*2 Press the MODE button to set between the range of 100P and 200P.

System Settings

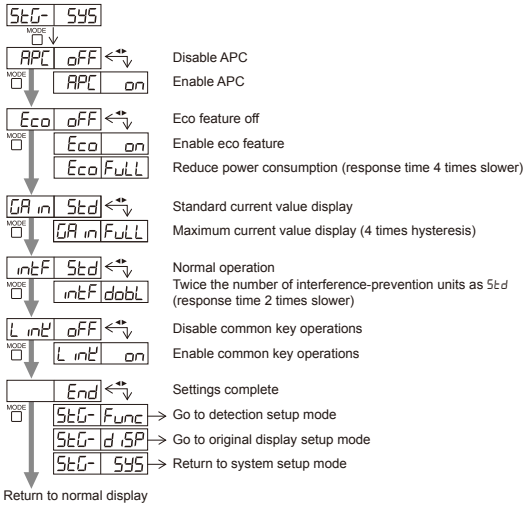

*1 Main unit only.

2-output Settings *2

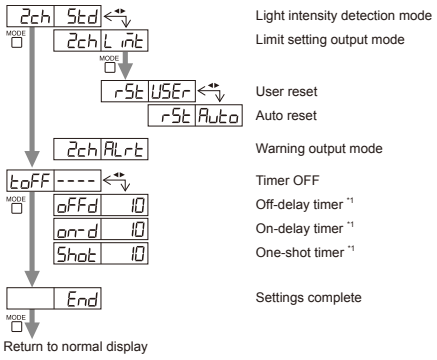

*1 Press the MODE button to set between the range of 1 and 9999(ms).
*2 Only 2 output types (FS-N13N/N13P/N14N/N14P/N13CP/N14CP).