KEYENCE

96M15888

96M15888-1

Intelligent monitor

IV-M30

Instruction Manual

Read this manual before using the product in order to achieve maximum performance.
Keep this manual in a safe place after reading it so that it can be used at any time.
For details of functions, refer to the User's Manual (Monitor).

- The User's Manual can be downloaded from the KEYENCE web site:
  http://www.keyence.com/

Symbols

The following symbols alert you to important messages. Be sure to read these messages carefully.

DANGER	**It indicates a hazardous situation which, if not avoided, will result in death or serious injury.**
WARNING	**It indicates a hazardous situation which, if not avoided, could result in death or serious injury.**
CAUTION	**It indicates a hazardous situation which, if not avoided, could result in minor or moderate injury.**
NOTICE	**It indicates a situation which, if not avoided, could result in product damage as well as property damage.**

Important	**It indicates cautions and limitations that must be followed during operation.**
Point	**It indicates additional information on proper operation.**
Reference	It indicates tips for better understanding or useful information.

Cautions

(1) Unauthorized reproduction of this manual in whole or part is prohibited.
(2) The contents of this manual may be changed for improvements without prior notice.
(3) An utmost effort has been made to ensure the contents of this manual are as complete as possible. If there are any mistakes or questions, please contact a KEYENCE office listed in the back of the manual.
(4) Regardless of item (3), KEYENCE will not be liable for any effect resulting from the use of this unit.
(5) Any manuals with missing pages or other paging faults will be replaced.

The company names and product names used in this manual are registered trademarks or the trademarks of their respective companies.

Safety Information for IV-M30

General Precautions

WARNING	**• Do not use this product for the purpose to protect a human body or a part of human body.** **• This product is not intended for use as an explosion-proof product. Do not use this product in a hazardous location and/or potentially explosive atmosphere.**
CAUTION	**• You must verify that the IV Series are operating correctly in terms of functionality and performance before the start and the operation of the IV Series.** **• We recommend that you take substantial safety measures to avoid any damage in the event of a problem occurring.**
NOTICE	**• KEYENCE never warrants the function or performance of the IV-M30 if it is used in manner that differs from the IV-M30 specifications contained in this instruction manual or if the IV-M30s are modified by yourself.** **• When the IV-M30 is used in combination with other instruments, functions and performance may be degraded, depending on operating conditions and the surrounding environment.** **• Do not place the instruments, including peripherals, under rapid temperature change. It may cause condensation and may damage instruments or peripherals.** **• Remove the power cable from the power supply if you do not use IV-M30 for a long time.**

Important Instructions

Observe the following precautions to prevent malfunction and to ensure that it is used properly.

Precautions on use

CAUTION	**• The power of the IV-M30 and instruments connected to IV-M30 must be turned off when the cable is to be installed or removed. Failure to do so may cause an electric shock or a product damage.** **• Use the IV-M30 in the correct supply voltage. Failure to do so may cause product damage.**
NOTICE	**• For instructions** **• Do not turn OFF the power while setting the items or saving the settings. Otherwise, all or part of the setting data may be lost.** **• The enclosure rating of the monitor (IV-M30) is IP40. As it is not waterproof, be careful when handling it.** **• When the IV-M30 becomes dirty, do not rub it with a wet cloth, benzene, thinner, or alcohol. Doing so may change the color or shape of the unit.** **• If the unit is heavily contaminated, disconnect all the cables including the power supply cable, wipe off the dirt with a cloth soaked with mild detergent, and then wipe with a soft dry cloth.** **• LCD panel** **• Do not press the touch panel with the tip of your nail or anything that has a sharp tip such as a pen or a screwdriver. Doing so may cause damage.** **• Do not apply shock to the touch panel or press it with excessive force. Doing so may cause damage.** **• The LCD panel may have some dots that are always lit (bright dots) or ones that are always unlit (black dots). This phenomenon is not a problem.** **• Due to the unique characteristics of an LCD, displaying the same image for a long time may cause an afterimage.** **• USB memory** **• Use products recommended by KEYENCE.** **• A USB memory device with a security function cannot be used.** **• Unplug the USB memory when turning on or off the power of IV-M30.** **• Do not remove the USB memory while the USB is being written on. Otherwise, all or part of the setting data may be lost or it may cause damage.**

Measures to be taken when an abnormality occurs

NOTICE	**In the following cases, turn the power OFF immediately. Using the IV Series in an abnormal condition could cause fire, electric shock, or malfunction. Contact our office for repair.** **• If water or debris enters the IV Series.** **• If the IV Series is dropped or the case is damaged.** **• If abnormal smoke or odor emanates from the IV Series.**

Precautions on installation

NOTICE

- **To use the IV-M30 correctly and safely, avoid installing it in the following locations. Failure to do so may cause fire, electric shock, or malfunction.**
  - **Outdoors**
  - **Altitude above 2000 m**
  - **Locations that are humid, dusty or poorly ventilated**
  - **Locations where the temperature is high such as those exposed to direct sunlight**
  - **Locations where there are flammable or corrosive gases**
  - **Locations where the unit may be directly subjected to vibration or impact**
  - **Locations where water, oil, or chemicals may splash onto the unit**
- **To improve the anti-noise feature, install the unit following the precautions below. Otherwise, a malfunction may occur.**
  - **Do not mount the unit in a cabinet where high-voltage equipment is already installed.**
  - **Mount the unit as far from power lines as possible.**
  - **Separate the unit as far as possible from the devices that emit strong electric or magnetic field (such as solenoid or chopper).**
  - **Separate the I/O signal line from the power line or high-voltage line.**
- **For power supply**
  - **Noise superimposed on the power supply could cause malfunction. Use a stabilized DC power supply configured with an isolation transformer.**
  - **When using a commercially available switching regulator, be sure to ground the frame ground terminal.**
- **Devices including this unit are precision components. Do not apply shock or vibration.**
- **When connecting to a network, let engineers who are knowledgeable about networks handle it.**

Precautions on Regulations and Standards

UL Certification

This product is a UL/C-UL Listed product.
- UL File No. E207185
- Category NRAQ, NRAQ7

Be sure to consider the following specifications when using this product as a UL Listed product
- Use a power supply with Class 2 output defined in NFPA70 (NEC: National Electrical Code).
- This product is for use on a flat surface of a Type 1 enclosure.

CE Marking

Keyence Corporation has confirmed that this product complies with the essential requirements of the applicable EC Directive, based on the following specifications. Be sure to consider the following specifications when using this product in the Member State of European Union.

● **EMC Directive (2004/108/EC)**

- Applicable Standard EMI : EN61326-1, Class A
  EMS : EN61326-1
- The length of Monitor power cable, Ethernet cable, and Monitor cable for a sensor with a built-in amplifier must be less than or equal to 30 m.

Remarks:
These specifications do not give any guarantee that the end-product with this product incorporated complies with the essential requirements of EMC Directive. The manufacturer of the end-product is solely responsible for the compliance on the end-product itself according to EMC Directive.

KC mark (Republic of Korea)

Class A device, Equipment name: Intelligent Monitor
This product is an industrial electromagnetic wave generating device (Class A) and is intended for use in all establishments other than domestic.
A 급 기기 (업무용 방송통신기자재), 기자재 명칭: Intelligent Monitor
이 기기는 업무용 (A 급) 전자파적합기기로서 판매자또는 사용자는 이 점을 주의하시기 바라며, 가정외의지역에서 사용하는 것을 목적으로 합니다.

Checking the Package Contents

Intelligent Monitor

- **IV-M30**

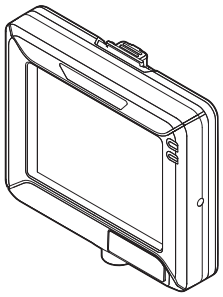

Monitor x 1

Instruction Manual x 1
(This manual)

Starting Guide x 1

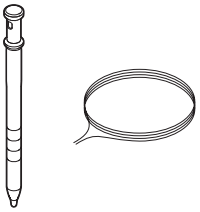

Stylus x 1
String for hanging the stylus x 1

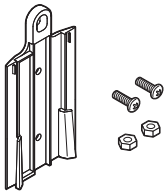

Wall mounting adapter x 1

Screw for adapter x 2

Hexagon nut x 2

Options for Monitor

■ Monitor power cable (M8 4pin - strand wire)

- **OP-87443 (2 m)** - **OP-87444 (5 m)** - **OP-87445 (10 m)**

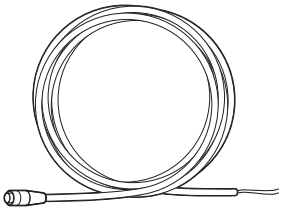

Monitor power cable (M8 4pin - strand wire) x 1

■ USB memory (1GB)

- **OP-87502**



USB memory x 1

■ Protection sheet

- **OP-87463**

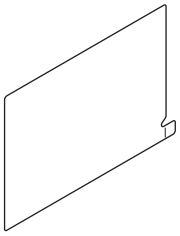

Protection sheet x 1

■ Stylus

- **OP-87462**



Stylus x 1

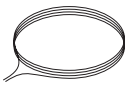

String for hanging the stylus x 1

Same as accessories for monitors.
Optional parts in case of loss/damage.

■ Wall mounting adapter

• OP-87464

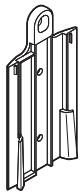

Wall mounting adapter x 1



Screws for adapter x 2

Hexagon nut x 2

Same as accessories for monitors.
Optional parts in case of loss/damage.

■ Panel mounting adapter

• OP-87465

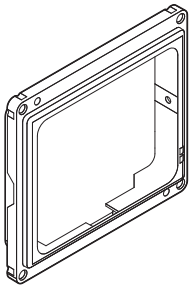

Panel mounting adapter x 1

“Mounting to a panel” (Page 5)



Mounting screw (lateral) x 2

Mounting screw (front) x 4

■ DIN mounting adapter

• OP-87466

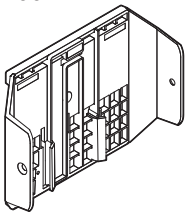

DIN mounting adapter x 1

“Mounting to the DIN rail” (Page 5)



Mounting screw (lateral) x 2

Communication Cable

■ Monitor cable for a sensor with a built-in amplifier (M12 4pin - M12 4pin)

• OP-87450 (2 m) **• OP-87452 (10 m)**
• OP-87451 (5 m) **• OP-87453 (20 m)**

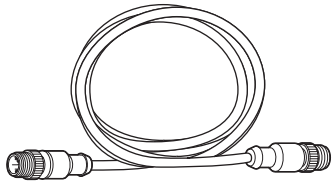

Monitor cable for a sensor with a built-in amplifier (M12 4pin - M12 4pin) x 1

The cable is used for connecting the IV-M30 and the sensor with a built-in amplifier.

■ Ethernet cable (M12 4pin - RJ-45)

• OP-87907 (1 m) **• OP-87457 (2 m)**
• OP-87458 (5 m) **• OP-87459 (10 m)**

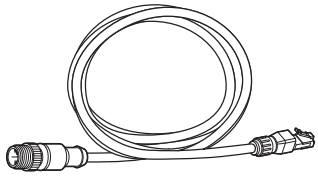

Ethernet cable (M12 4pin - RJ-45) x 1

This cable is used for connecting the IV-M30 to the sensor amplifier for the ultra compact model, an Ethernet switch, or other devices.

Name and function of each part

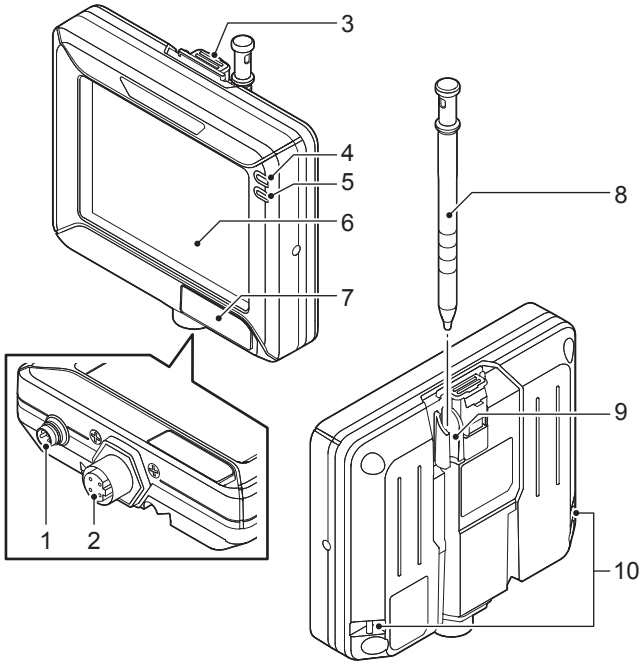

1 Power connector
Connects the monitor power cable.
“Cables” (Page 6)

2 Connector for the monitor cable for a sensor with a built-in amplifier/Ethernet cable
Connects the monitor cable for a sensor with a built-in amplifier or Ethernet cable. Used when connecting with the sensor or an Ethernet switch.
“Cables” (Page 6)

3 Unlock button
Push this button when dismounting the monitor from the wall mounting adapter or DIN mounting adapter.
“Unmounting from the wall mounting adapter” (Page 5)
“Unmounting from the DIN mounting adapter” (Page 6)

4 Indicator light (PWR)
Indicates the operating status of the monitor.
- Green (ON) .....The power is turned ON.
- Red (ON).....Unrecoverable error occurred to the sensor or monitor.
- Red (Blink) .....Recoverable error occurred to the sensor or monitor.
- (OFF) .....The power is turned OFF.

5 Indicator light (SENSOR)
Indicates the connecting status to the sensor (built-in amplifier model)/sensor amplifier (ultra compact model).
- Green (ON) .....Connected normally to the sensor.
- Green (Slowly blinks) ...Linked normally but it is not properly connected to the sensor.
- (OFF) .....It is not properly connected because it did not link normally.

6 LCD monitor/Touch panel
Displays the operation screen and setup screen. Operates by touching the screen with the stylus.

7 USB connecting connector
Connector for connecting the USB memory. Connector is protected by a cover.

8 Stylus
Used to operate the touch-screen.

9 Stylus holder
Stores the stylus.

10 Strap holder
Holds the strap or hangs the stylus.

Attachment

Mounting to a wall

Use the wall mounting adapter (accessories or OP-87464). Hang it on the hook with the wall mounting adapter mounted to the monitor, or mount the monitor to the wall mounting adapter mounted on the wall.

Reference The monitor is shipped with the wall mounting adapter mounted.

■ Hanging on the hook

For operation take the monitor from the hook and operate it while holding it in your hands.

1 **Mount the monitor to the wall mounting adapter by aligning the stopper of the wall mounting adapter to the groove on the rear monitor.**
Slide the monitor down all the way, and confirm that the monitor is locked.

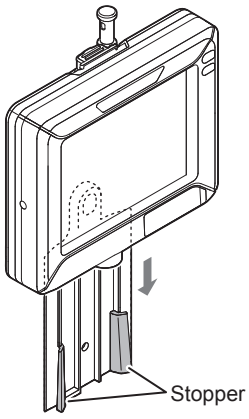

2 **Hang the monitor on the hook.**

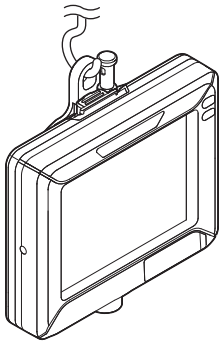

■ Mounting with the wall mounting adapter

The monitor can be operated by the following methods.
- Unhang to pick up the monitor from the hook and operate it.
- Operate it while mounted on the wall.

1 **Mount the wall mounting adapter to the wall.**

● **Mounting by creating a screw hole in the wall**
- Screw : M3 x 2
  Use commercially available screws.
- Tightening torque : 0.27 to 0.33 N·m

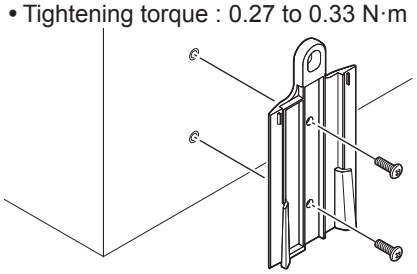

● **Mounting by creating a plated through hole on the panel**
- Screw : M3 x 2, Nut : M3 x 2
  Use the attached screws and nuts.
- Tightening torque : 0.27 to 0.33 N·m

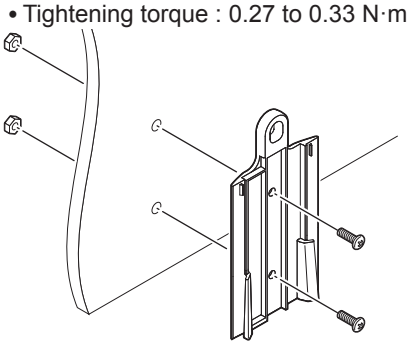

2 **Mount the monitor to the wall mounting adapter by aligning the stopper of the wall mounting adapter to the groove on the rear monitor.**
Slide the monitor down all the way, and confirm that the monitor is locked.

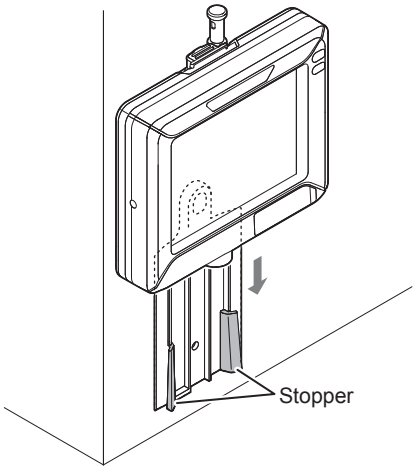

■ Unmounting from the wall mounting adapter

Unlock the monitor from the wall mounting adapter by pulling toward the unlock button. And slide up to unmount the monitor mounted to the adapter.

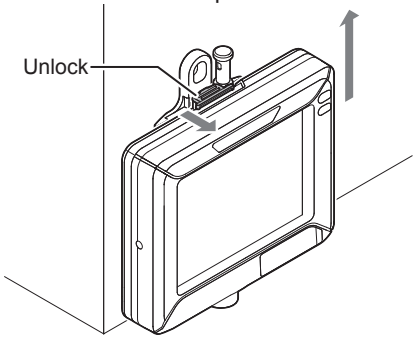

Mounting to a panel

Operate the monitor by mounting it to a panel such as a control board.
Mount the panel adapter (OP-87465) to the monitor, and mount it to the panel.

1 Connect the power cable and the Ethernet cable or monitor cable for a sensor with a built-in amplifier to the monitor.

“Cables” (Page 6)

2 Mount the panel adapter to the monitor and fix it with the attached screws.

- Screw : M3, 11 mm long, with a washer x 2
  Use the attached screws.
- Tightening torque : 0.27 to 0.33 N·m

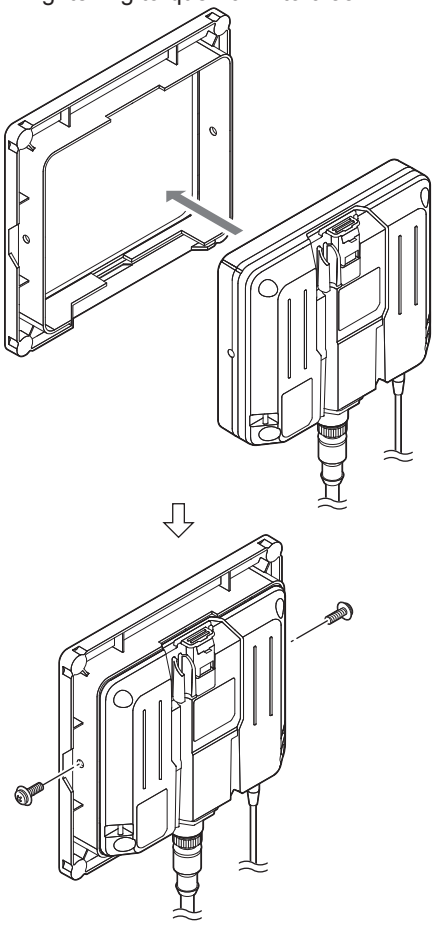

3 Mount the monitor with the panel adapter mounted to the control board from the rear side, and fix it with the screws.

- Make a “92 mm x 111 mm” size mounting hole on the control board.
- Mountable board thickness : 1 to 4 mm
- Screw : M3, 7 mm long, with a washer x 4
  Use the attached screws.
- Tightening torque : 0.5 N·m or lower

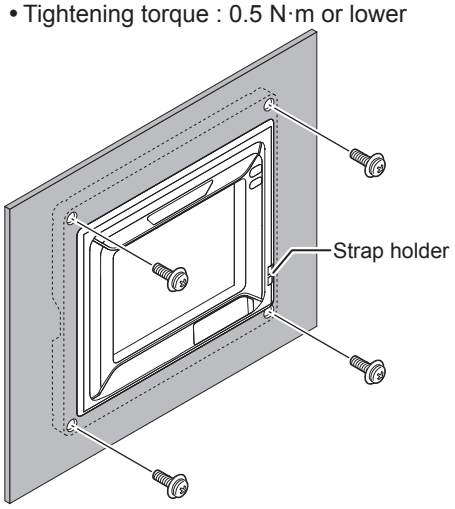

Reference Stylus can be hung from the strap holder using the hanging string (accessory).

Mounting to the DIN rail

Mount the DIN adapter (OP-87466) to the monitor, and mount it to the DIN rail.
The monitor can be operated by the following methods.

- Pick up the monitor from the DIN mounting adapter and operate it.
- Operate it while mounted on the DIN rail.

■ Mounting using DIN mounting adapter

1 Mount the monitor to the DIN mounting adapter.

Slide the monitor down all the way and confirm that the monitor is locked.

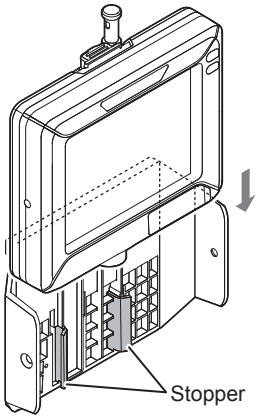

● Fixing to the DIN mounting adapter

To fix the monitor to the DIN mounting adapter, use the attached screws.

- Screw : M3 x 2
  Use the attached flat head screw.
- Tightening torque : 0.27 to 0.33N·m

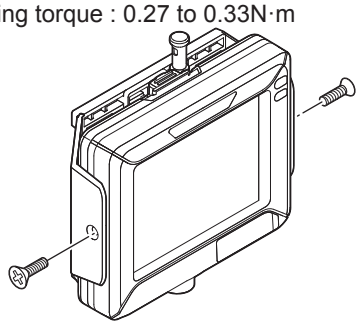

2 **Adjust the position of the DIN mounting adapter and the DIN rail by pulling down the stopper of the adapter, and then push up the stopper to lock it.**

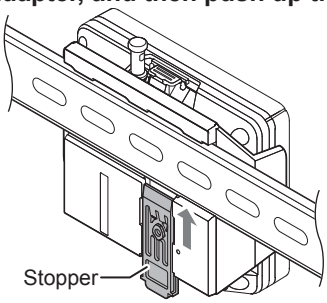

■ Unmounting from the DIN mounting adapter

Unlock the monitor from the DIN mounting adapter by pulling toward the unlock button. And slide up to unmount the monitor mounted to the adapter.

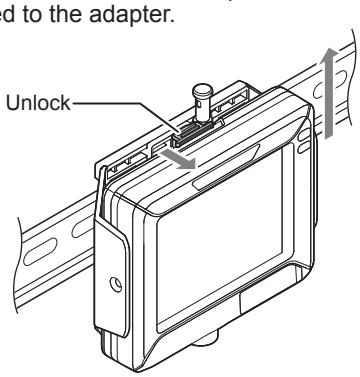

Cables

Connecting the power cable of the monitor

1 **Align the arrow mark of the power cable and the direction of the front monitor, and connect the cable to the monitor.**

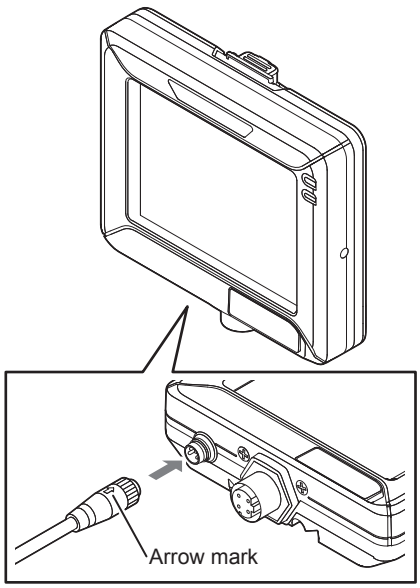

2 **Turn the screw-on connector in clockwise direction to tighten it.**

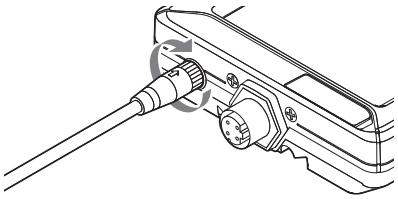

3 **Wire to the power supply.**

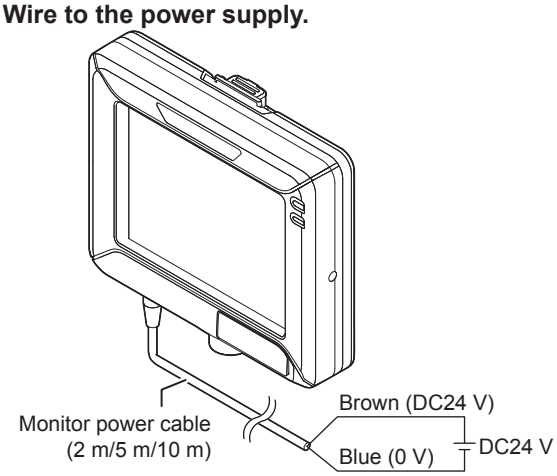

Cable specification Brown/Blue: AWG24

Connecting the sensor and the monitor

■ Connecting directly

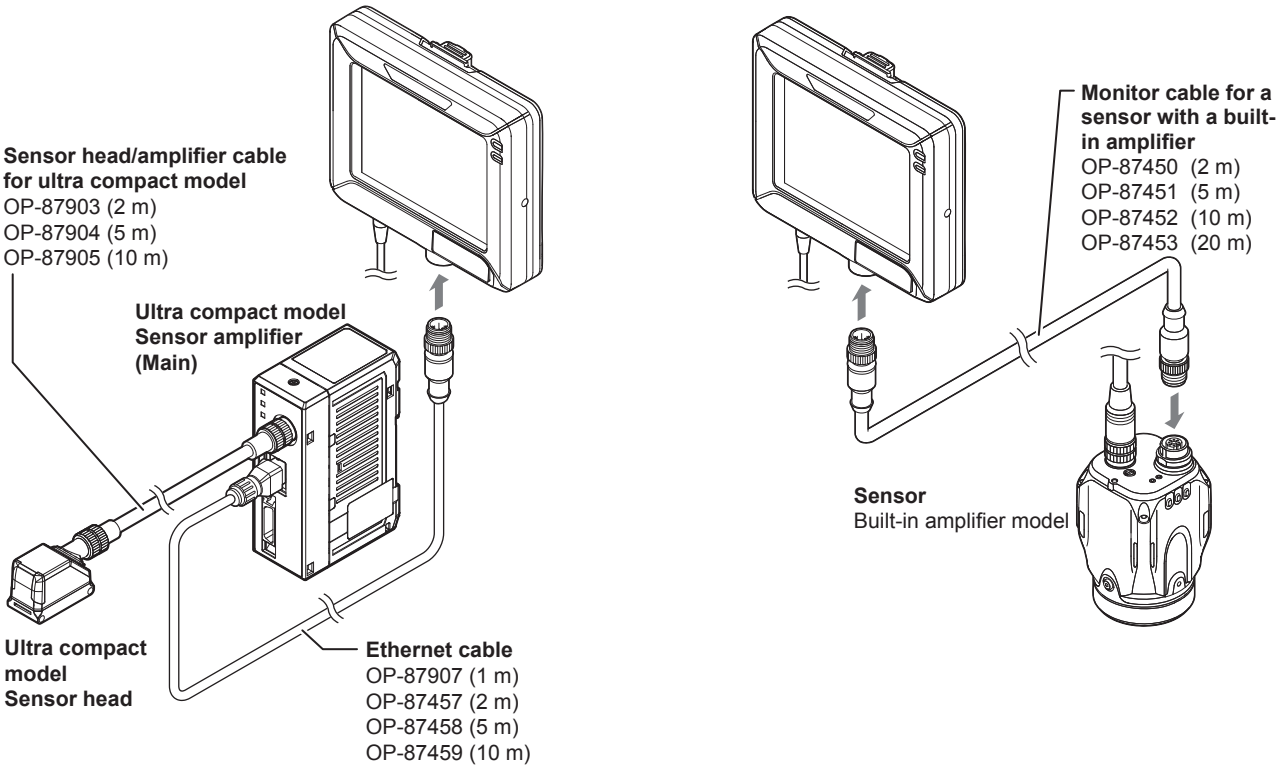

For details on connection using the Ultra compact model Sensor amplifier (Expansion), refer to “User’s Manual (Monitor)”.

■ Connecting via a network

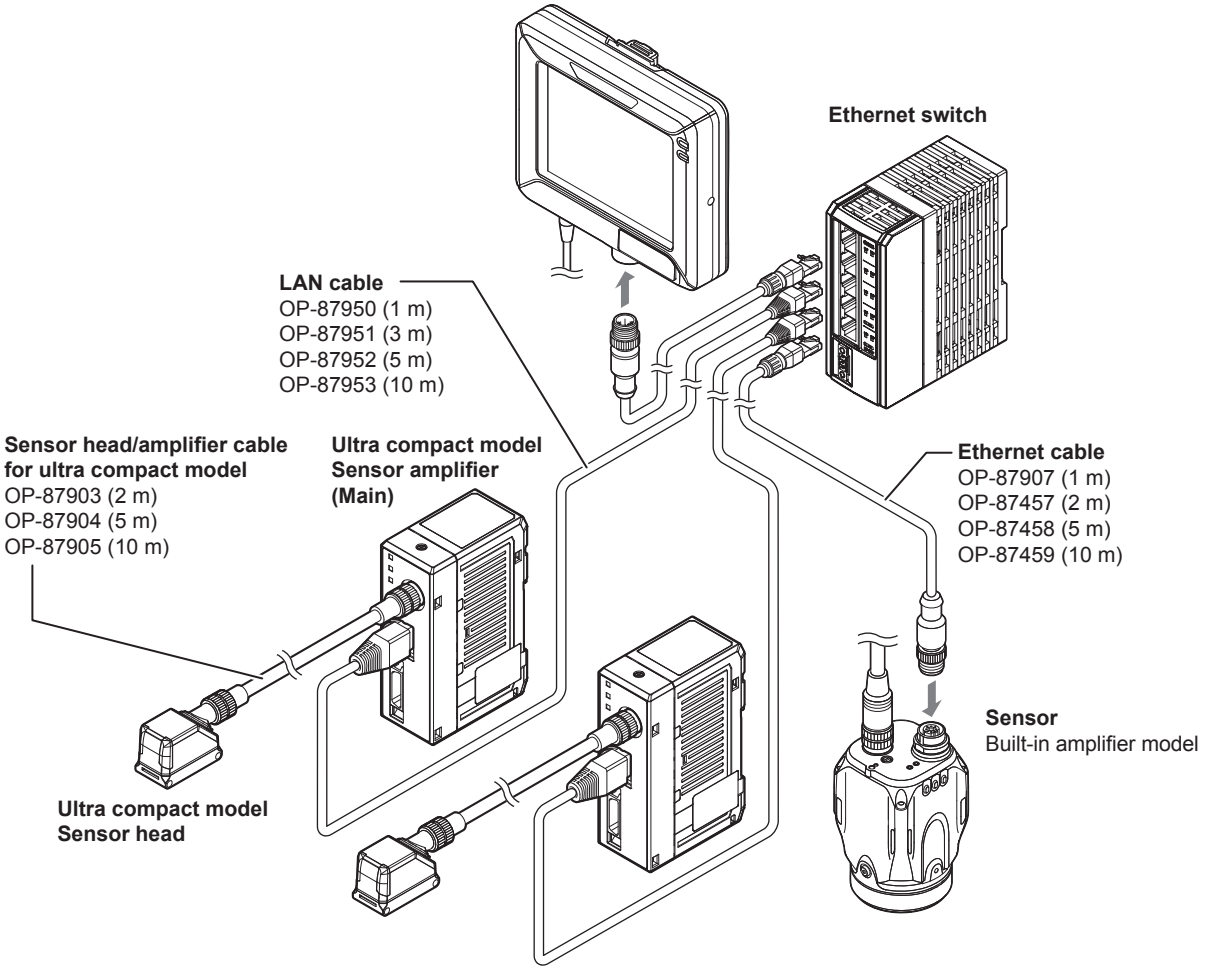

For details on connection using the Ultra compact model Sensor amplifier (Expansion), refer to “User’s Manual (Monitor)”.

NOTICE	**The sensor and monitor do not support PoE (Power over Ethernet). Supply power using the power cable.**

Dimensions

Monitor

IV-M30

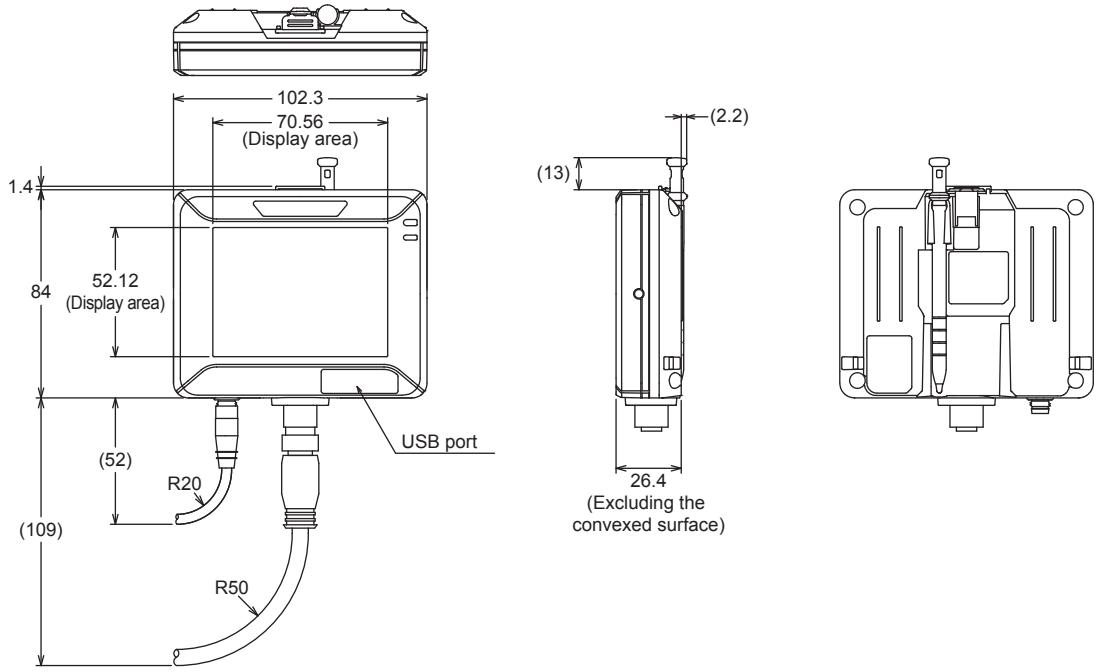

• Using the wall mounting adapter

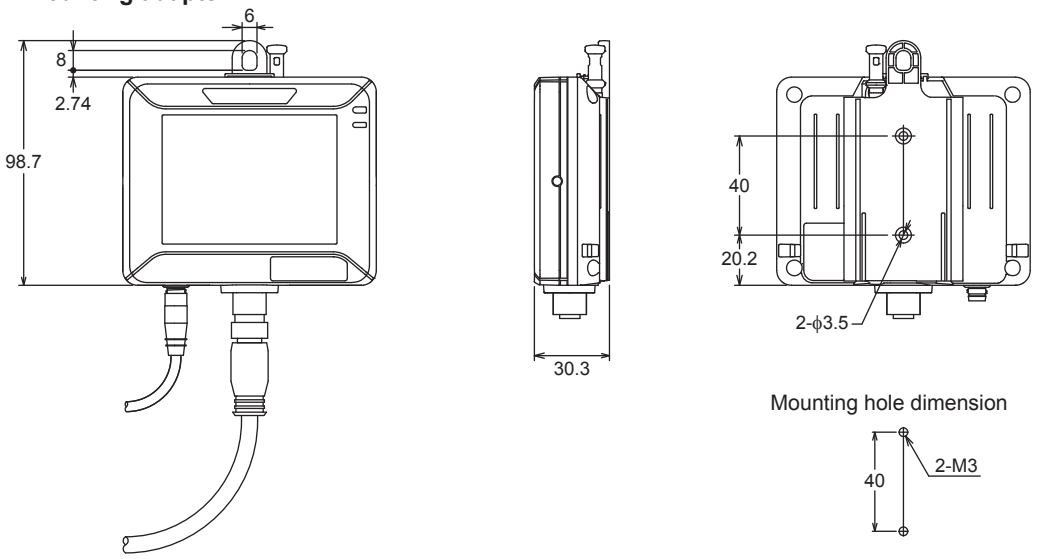

• Using the panel mounting adapter

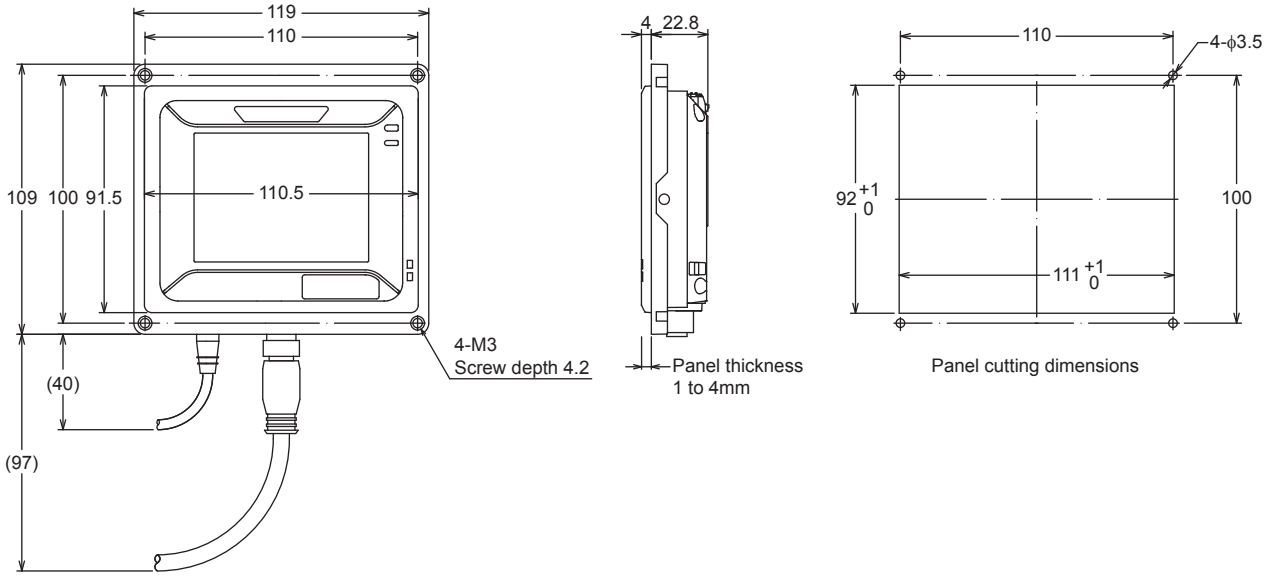

• Using the DIN mounting adapter

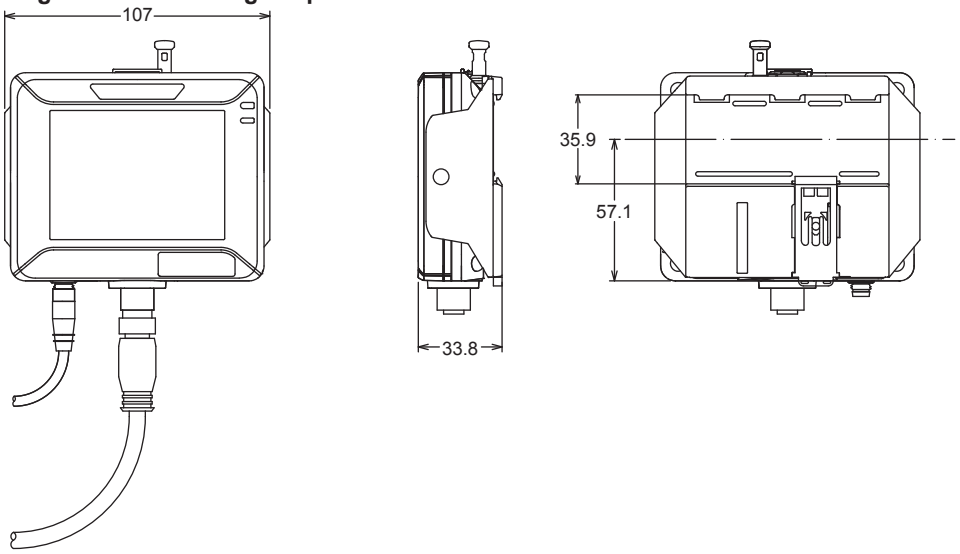

Monitor power cable

OP-87443 (2 m) / OP-87444 (5 m) / OP-87445 (10 m)

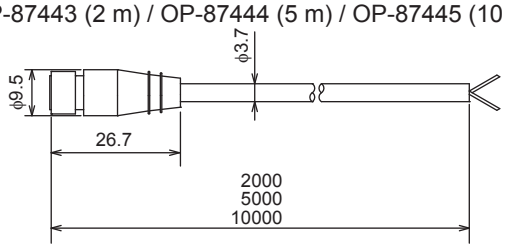

Monitor cable for a sensor with a built-in amplifier

OP-87450 (2 m) / OP-87451 (5 m) / OP-87452 (10 m) / OP-87453 (20 m)

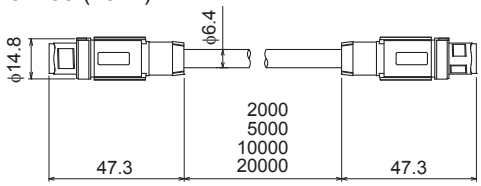

Ethernet cable

OP-87907 (1 m) / OP-87457 (2 m) / OP-87458 (5 m) / OP-87459 (10 m)

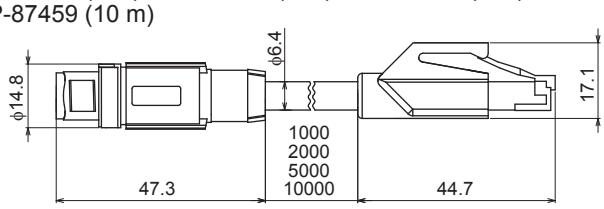

Specifications

Model		IV-M30
Display		3.5" TFT color LCD 320 x 240 dot (QVGA)
Backlight	Method	White LED
	Duration	Approx. 50,000 hours (25 ˚C)
Touch panel	Method	Analog resistive
	Actuating force	0.8 N or less
Indicators		PWR, SENSOR
Ethernet *1	Standard	100BASE-TX/10BASE-T
	Connector	M12 4pin connector
Languages		Japanese / English / Deutsch / Chinese (Simplified) / Chinese (Traditional) / Italian / French / Spanish / Portuguese / Korean
Expanded memory		USB memory *2
Rating	Power voltage	DC24 V ± 10% (including ripple)
	Consumption current	0.2 A or lower
Environmental resistance	Ambient temperature	0 to + 50˚C (No freezing)
	Relative humidity *3	35 to 80 % RH (No condensation)
	Vibration	10 to 55 Hz, 0.7 mm double amplitude, 2 hours each for X, Y, and Z axes
	Drop impact resistance	1.3 m over the concrete (2 times each in the arbitrary direction)
	Enclosure rating	IP40
Material		Polycarbonate
Weight		Approx. 180 g

*1 This is dedicated for connection with the sensor.
*2 Use the KEYENCE recommended product.
*3 If the ambient temperature is over 40˚C, use it in the absolute humidity of 40˚C 80% RH or lower.

Warranties and Disclaimers

(1) KEYENCE warrants the Products to be free of defects in materials and workmanship for a period of one (1) year from the date of shipment. If any models or samples were shown to Buyer, such models or samples were used merely to illustrate the general type and quality of the Products and not to represent that the Products would necessarily conform to said models or samples. Any Products found to be defective must be shipped to KEYENCE with all shipping costs paid by Buyer or offered to KEYENCE for inspection and examination. Upon examination by KEYENCE, KEYENCE, at its sole option, will refund the purchase price of, or repair or replace at no charge any Products found to be defective. This warranty does not apply to any defects resulting from any action of Buyer, including but not limited to improper installation, improper interfacing, improper repair, unauthorized modification, misapplication and mishandling, such as exposure to excessive current, heat, coldness, moisture, vibration or outdoors air. Components which wear are not warranted.

(2) KEYENCE is pleased to offer suggestions on the use of its various Products. They are only suggestions, and it is Buyer's responsibility to ascertain the fitness of the Products for Buyer's intended use. KEYENCE will not be responsible for any damages that may result from the use of the Products.

(3) The Products and any samples ("Products/Samples") supplied to Buyer are not to be used internally in humans, for human transportation, as safety devices or fail-safe systems, unless their written specifications state otherwise. Should any Products/Samples be used in such a manner or misused in any way, KEYENCE assumes no responsibility, and additionally Buyer will indemnify KEYENCE and hold KEYENCE harmless from any liability or damage whatsoever arising out of any misuse of the Products/ Samples.

(4) OTHER THAN AS STATED HEREIN, THE PRODUCTS/SAMPLES ARE PROVIDED WITH NO OTHER WARRANTIES WHATSOEVER. ALL EXPRESS, IMPLIED, AND STATUTORY WARRANTIES, INCLUDING, WITHOUT LIMITATION, THE WARRANTIES OF MERCHANTABILITY, FITNESS FOR A PARTICULAR PURPOSE, AND NON-INFRINGEMENT OF PROPRIETARY RIGHTS, ARE EXPRESSLY DISCLAIMED. IN NO EVENT SHALL KEYENCE AND ITS AFFILIATED ENTITIES BE LIABLE TO ANY PERSON OR ENTITY FOR ANY DIRECT, INDIRECT, INCIDENTAL, PUNITIVE, SPECIAL OR CONSEQUENTIAL DAMAGES (INCLUDING, WITHOUT LIMITATION, ANY DAMAGES RESULTING FROM LOSS OF USE, BUSINESS INTERRUPTION, LOSS OF INFORMATION, LOSS OR INACCURACY OF DATA, LOSS OF PROFITS, LOSS OF SAVINGS, THE COST OF PROCUREMENT OF SUBSTITUTED GOODS, SERVICES OR TECHNOLOGIES, OR FOR ANY MATTER ARISING OUT OF OR IN CONNECTION WITH THE USE OR INABILITY TO USE THE PRODUCTS, EVEN IF KEYENCE OR ONE OF ITS AFFILIATED ENTITIES WAS ADVISED OF A POSSIBLE THIRD PARTY'S CLAIM FOR DAMAGES OR ANY OTHER CLAIM AGAINST BUYER. In some jurisdictions, some of the foregoing warranty disclaimers or damage limitations may not apply.

BUYER'S TRANSFER OBLIGATIONS:

If the Products/Samples purchased by Buyer are to be resold or delivered to a third party, Buyer must provide such third party with a copy of this document, all specifications, manuals, catalogs, leaflets and written information provided to Buyer pertaining to the Products/Samples.

E 1101-3

KEYENCE CORPORATION

1-3-14, Higashi-Nakajima, Higashi-Yodogawa-ku,
Osaka, 533-8555, Japan
PHONE: +81-6-6379-2211

www.keyence.com

AUSTRIA
Ph: +43 22 36-3782 66-0

BELGIUM
Ph: +32 1 528 1222

BRAZIL
Ph: +55-11-3045-4011

CANADA
Ph: +1-905-366-7655

CHINA
Ph: +86-21-3357-1001

CZECH REPUBLIC
Ph: +420 222 191 483

FRANCE
Ph: +33 1 56 37 78 00

GERMANY
Ph: +49 6102 36 89-0

HONG KONG
Ph: +852-3104-1010

HUNGARY
Ph: +36 1 802 73 60

INDIA
Ph: +91-44-4963-0900

INDONESIA
Ph: +62-21-2966-0120

ITALY
Ph: +39-02-6688220

KOREA
Ph: +82-31-789-4300

MALAYSIA
Ph: +60-3-7883-2211

MEXICO
Ph: +52-55-8850-0100

NETHERLANDS
Ph: +31 40 20 66 100

POLAND
Ph: +48 71 36861 60

ROMANIA
Ph: +40 269-232-808

SINGAPORE
Ph: +65-6392-1011

SLOVAKIA
Ph: +421 2 5939 6461

SLOVENIA
Ph: +386 1-4701-666

SWITZERLAND
Ph: +41 43-45577 30

TAIWAN
Ph: +886-2-2721-8080

THAILAND
Ph: +66-2-369-2777

UK & IRELAND
Ph: +44-1908-696900

USA
Ph: +1-201-930-0100

VIETNAM
Ph: +84-4-3772-5555

Specifications are subject to change without notice. A6WW1-MAN-1086

Copyright (c) 2019 KEYENCE CORPORATION. All rights reserved.
15888GB 1049-1 96M15888 Printed in Japan