KEYENCE

96M12230

96M12230-3

Vision Sensor

IV-500C / IV-500CA / IV-500M / IV-500MA / IV-150M / IV-150MA / IV-2000M / IV-2000MA

Instruction Manual

Read this manual before using the product in order to achieve maximum performance.
Keep this manual in a safe place after reading it so that it can be used at any time.
For details of functions, refer to the IV Series User's Manual (Monitor) or the IV Series User's Manual (PC).

- The IV Series User's Manual can be downloaded from the KEYENCE web site:
  http://www.keyence.com/

Symbols

The following symbols alert you to important messages. Be sure to read these messages carefully.

DANGER	**It indicates a hazardous situation which, if not avoided, will result in death or serious injury.**
WARNING	**It indicates a hazardous situation which, if not avoided, could result in death or serious injury.**
CAUTION	**It indicates a hazardous situation which, if not avoided, could result in minor or moderate injury.**
NOTICE	**It indicates a situation which, if not avoided, could result in product damage as well as property damage.**
Important	**It indicates cautions and limitations that must be followed during operation.**
Point	**It indicates additional information on proper operation.**
Reference	It indicates tips for better understanding or useful information.

Cautions

(1) Unauthorized reproduction of this manual in whole or part is prohibited.
(2) The contents of this manual may be changed for improvements without prior notice.
(3) An utmost effort has been made to ensure the contents of this manual are as complete as possible. If there are any mistakes or questions, please contact a KEYENCE office listed in the back of the manual.
(4) Regardless of item (3), KEYENCE will not be liable for any effect resulting from the use of this unit.
(5) Any manuals with missing pages or other paging faults will be replaced.

The company names and product names used in this manual are registered trademarks or the trademarks of their respective companies.

Safety Information for IV series

General Precautions

DANGER	• Do not use this product for the purpose to protect a human body or a part of human body. • This product is not intended for use as an explosion-proof product. Do not use this product in a hazardous location and/or potentially explosive atmosphere.
CAUTION	• You must verify that the IV Series are operating correctly in terms of functionality and performance before the start and the operation of the IV Series. • We recommend that you take substantial safety measures to avoid any damage in the event of a problem occurring.
NOTICE	• KEYENCE never warrants the function or performance of the IV Series if it is used in manner that differs from the IV Series specifications contained in this instruction manual or if the IV Series are modified by yourself. • When the IV Series is used in combination with other instruments, functions and performance may be degraded, depending on operating conditions and the surrounding environment. • Do not place the instruments, including peripherals, under rapid temperature change. It may cause condensation and may damage instruments or peripherals. • Remove the power cable from the power supply if you do not use this product for a long time.

Important Instructions

Observe the following precautions to prevent malfunction of the IV Series and to ensure that it is used properly.

Precautions on use

CAUTION	• The power of this product and instruments connected to this product must be turned off when the cable is to be installed or removed. Failure to do so may cause an electric shock or a product damage. • Use this product in the correct supply voltage. Failure to do so may cause a product damage.

NOTICE	• For instructions
	  • Do not turn OFF the power while setting the items or saving the settings. Otherwise, all or part of the setting data may be lost.
	  • Do not let water, dust or oil stick to the camera/light of the sensor. Failure to do so may cause a malfunction.
	  • When this product becomes dirty, do not rub it with a wet cloth, benzene, thinner, or alcohol. Doing so may change the color or shape of the unit.
	  • If the unit is heavily contaminated, disconnect all the cables including the power supply cable, wipe off the dirt with a cloth soaked with mild detergent, and then wipe with a soft dry cloth.
	• For external master image registration
	When the external master image registration is used frequently, set "Write ROM when registering external master" of the input option to "No" for nonvolatile memory protection of the internal sensor. When the option is set to "Yes", the nonvolatile memory is guaranteed to write for 100,000 times.
	• For automatic focus function
	  • Automatic focus function is used for adjusting the focusing position at the time of installation. This will not activate during the operation.
	  • Focusing position can be registered in each program. The program configurations are guaranteed to switch for 100,000 times. If the focusing position does not need to change for each program, set "AF Adjustment Pos" to "Common" for extending the life-span.
	  • Do not apply shock or vibration during the focusing position adjustment . Failure to do so may cause a product damage.

Measures to be taken when an abnormality occurs

NOTICE

In the following cases, turn the power OFF immediately. Using the IV Series in an abnormal condition could cause fire, electric shock, or malfunction. Contact our office for repair.
- **If water or debris enters the IV Series.**
- **If the IV Series is dropped or the case is damaged.**
- **If abnormal smoke or odor emanates from the IV Series.**

Precautions on installation

NOTICE

- **To use this product correctly and safely, avoid installing it in the following locations. Failure to do so may cause fire, electric shock, or malfunction.**
  - **Outdoors**
  - **Altitude above 2000 m**
  - **Locations that are humid, dusty or poorly ventilated**
  - **Locations where the temperature is high such as those exposed to direct sunlight**
  - **Locations where there are flammable or corrosive gases**
  - **Locations where the unit may be directly subjected to vibration or impact**
  - **Locations where water, oil, or chemicals may splash onto the unit**
- **To improve the anti-noise feature, install the unit following the precautions below. Otherwise, a malfunction may occur.**
  - **Mount the sensor onto the insulated attached mounting adapter.**
  - **Ground the FG cable (drain cable) of the sensor.**
  - **Do not mount the unit in a cabinet where high-voltage equipment is already installed.**
  - **Mount the unit as far from power lines as possible.**
  - **Separate the unit as far as possible from the devices that emit strong electric or magnetic field (such as solenoid or chopper).**
  - **Separate the I/O signal line from the power line or high-voltage line.**

NOTICE

- **For power supply**
  - **Noise superimposed on the power supply could cause malfunction. Use a stabilized DC power supply configured with an isolation transformer.**
  - **When using a commercially available switching regulator, be sure to ground the frame ground terminal.**
- **Devices including this unit are precision components. Do not apply shock or vibration.**
- **When connecting to a network, let engineers who are knowledgeable about networks handle it.**

Safety Precautions on LED Product

The degree of risk of this product is shown below.

Model	Light source	Risk Group*
IV-500C	White LED	Risk Group 1
IV-500CA		
IV-500M	Red LED	Exempt Group
IV-500MA		
IV-150M		
IV-150MA		
IV-2000M	Infrared LED	Exempt Group
IV-2000MA		

* LED product is classified as shown below according to IEC 62471.

- Exempt Group — Does not pose any photobiological hazard.
- Risk Group 1 (Low-Risk) — Does not pose a hazard due to normal behavioral limitations on exposure.
- Risk Group 2 (Moderate-Risk) — Does not pose a hazard due to the aversion response to very bright light sources or due to thermal discomfort.
- Risk Group 3 (High-Risk) — May pose a hazard even for momentary or brief exposure.

Precautions on Regulations and Standards

UL Certification

This product is a UL/C-UL Listed product.
- UL File No. E301717
- Category NRKH, NRKH7

Be sure to consider the following specifications when using this product as a UL Listed product.
- Use a power supply with Class 2 output defined in NFPA70 (NEC: National Electrical Code).
- Power supply/ External input/ Control output shall be connected to a single Class 2 source only.
- Use with an over current protection device which is rated 24 V or more and not more than 1 A.
- Enclosure Type 1 (Based on UL50)

CE Marking

Keyence Corporation has confirmed that this product complies with the essential requirements of the applicable EC Directive, based on the following specifications. Be sure to consider the following specifications when using this product in the Member State of European Union.

● **EMC Directive**
- Applicable Standard EN60947-5-2, Class A
- The length of power/IO cable, Ethernet cable and Monitor cable must be less than or equal to 30m.

Remarks:
These specifications do not give any guarantee that the end-product with this product incorporated complies with the essential requirements of EMC Directive. The manufacturer of the end-product is solely responsible for the compliance on the end-product itself according to EMC Directive.

KC mark (Republic of Korea)

Class A device, Equipment name: Vision Sensor
This product is an industrial electromagnetic wave generating device (Class A) and is intended for use in all establishments other than domestic.
A 급 기기 (업무용 방송통신기자재), 기자재 명칭: Vision Sensor
이 기기는 업무용 (A 급) 전자파적합기기로서 판매자또는 사용자는 이 점을 주의하시기 바라며, 가정외의지역에서 사용하는 것을 목적으로 합니다.

Checking the Package Contents

Sensor

- **IV-500C** • **IV-150M** • **IV-500CA** • **IV-150MA**

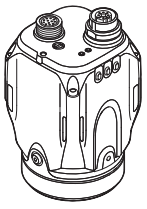

Sensor x 1

- **IV-500M** • **IV-2000M** • **IV-500MA** • **IV-2000MA**



Mounting adapter x 1
Screw for mounting adapter x 1



Waterproof cap for Ethernet connector x 1

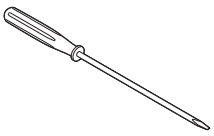

Flathead screwdriver x1 (Manual focus type only)

Instruction Manual x 1 (This manual)

The mounting adapter is mounted on the monitor in the default factory setting.

Optional parts for sensor

■ Dome attachment

• IV-D10

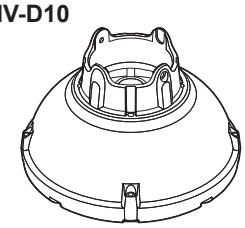

Dome attachment x 1



Mounting screw x 2

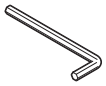

Hexagon wrench (L-shaped) x 1

Instruction Manual x 1

■ Polarized visible light filter attachment

• OP-87436



Polarized visible light filter attachment x 1



Mounting screw x 2

Instruction Manual x 1

■ Infrared polarization filter attachment

• OP-87437



Infrared polarization filter attachment x 1



Mounting screw x 2

Instruction Manual x 1

■ Power I/O cable (M12 12pin - strand wire)

• OP-87440 (2m) **• OP-87441 (5m)** **• OP-87442 (10m)**

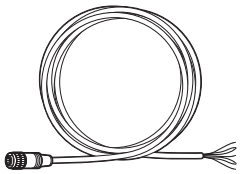

Power I/O cable (M12 12pin - strand wire) x 1

■ Mounting adapter

• OP-87460

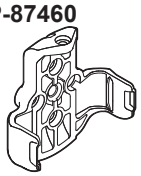

Mounting adapter x 1

Screw for mounting adapter x 1

Same as the accessories for sensor.
Optional parts in case of loss/damage.

■ Front cover (for replacement)

• OP-87461



Front cover (for replacement) x 1



Mounting screw x 2



O-shaped ring (Small x 2, Large x 1)

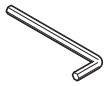

Hexagon wrench (L-shaped) x 1

Instruction Manual x 1

Optional parts for replacement.

■ Bracket

• OP-87685×1



Bracket A x 1



Bracket B x 1

Mounting screw for bracket + Nut x 1

Screw for mounting adapter x 4

Name and function of each part

■ Name and function of each part of sensor

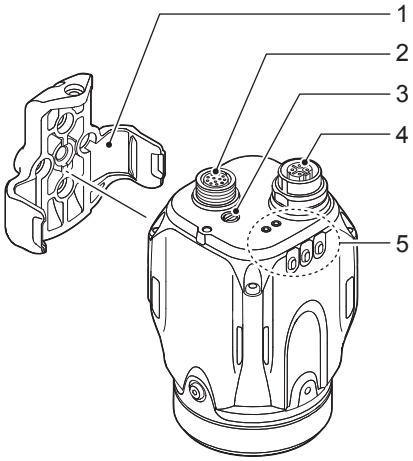

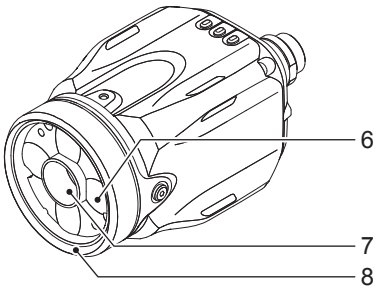

1 Sensor mounting adapter
Use this for mounting and fixing the sensor.
“Mounting” (Page 4)

2 Connector for power I/O cable
Connector for connecting a power I/O cable.
Use this for supplying power to the sensor and for connecting with external devices.
“Cables” (Page 6)

3 Focusing position adjustment screw (manual focus type only)
Adjusts the focus of displayed images.

4 Connector for monitor cable/Ethernet cable
Connector for connecting a monitor cable or Ethernet cable. Use this for connecting the monitor, PC, or Ethernet switch.
“Cables” (Page 6)

NOTICE	**When the cable is not connected, attach the waterproof cap for Ethernet connector to maintain enclosure rating.** **Tightening torque : 0.45 to 0.55 N·m**

5 Indicator light
Indicates the operating status of the sensor.
“Operation of the indicator light” (Page 4)

6 Built-in light
LED light that illuminates the object.

7 Camera
Images the object.

8 Front cover
Protects the camera and built-in lights.
The front cover is protected by the protection sheet (blue) in the default factory setting.
Remove the sheet when the sensor is to be used.
Front cover for replacement is provided for maintenance.

■ Operation of the indicator light

Details on operations of indicator light are shown below.

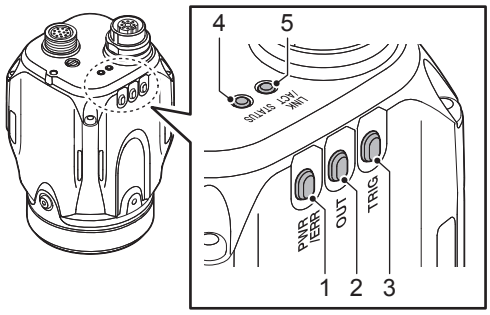

1 PWR/ERR

Indicates the power supplying status to the sensor and error status of the sensor.

- Green (ON) .....Operating.
- Green (Blink)....Setting processing. Operation is stopped. Blinks once a second.
- Red (ON).....Unrecoverable error has occurred.
- Red (Blink) .....Recoverable error has occurred.
- (OFF) .....Power is not supplied. Adjusting the focusing position (manual focus only).

2 OUT

Indicates the comprehensive results.

- Green .....Comprehensive result is "OK".
- Red .....Comprehensive result is "Fail".
- (OFF) .....Setting processing. Standby status until the first judge finishes after starting the operation or after switching the program number.
- Orange (Blink)...Indicates the focusing status while adjusting the focusing position with the blinking speed (manual focus type only).

3 TRIG

Green light lights up (one-shot) according to input of the internal or external trigger.

4 STATUS

Indicates the connection status within the monitor.

- Green (ON) .....Normally connected with monitor or PC.
- Green (Blink)....IP address has been retrieved but the sensor is not correctly connected with monitor or PC.
- (OFF) .....IP address is not assigned. Sensor is not correctly connected with monitor or PC.
- Orange (Blink)...Indicates the focusing status while adjusting the focusing position with the blinking speed (manual focus type only).

5 LINK/ACT

Indicates the linking status within monitor or Ethernet switch.

- Green (ON) .....Normally linked.
- Green (Blink)....Normally linked, and the data is sending/receiving.
- (OFF) .....Sensor is not normally linked.

Mounting

NOTICE

- **Ground (functional ground) the drain cable (FG) of the power I/O cable.**
- **Mount and insulate the sensor. Use the attached mounting adapter to insulate. Sensor case has been grounded. If the sensor is not insulated, electric potential and noises may cause a damage or malfunction.**
- **Do not place the sensor in the environment that exceeds the limit of sensor's resistance to the environment, or environment that propagates the vibration directly to the sensor. Those may cause a damage or malfunction.**

Point

- **Manual focus type needs to adjust the focusing position after installed. Reserve enough space to adjust and install it.**
- **At the time of installation, it is better to enable the position or direction adjustment of the sensor by installing the adjustment system at the sensor mounting area.**
- **View and optical axis have individual differences. Adjust the position by checking the actual image at the time of installation.**
- **Place the sensor where no ambient light has effect. Ambient light includes solar light, lights of other devices, and photoelectric sensors. Also, be careful when the light intensity of the ambient light changes. Use the shield to protect when the location cannot be changed.**
- **Place the sensor where no object can block out the internal light or the view of the sensor.**
- **Detection may become unstable due to the lights if multiple sensors are placed nearby each other. Delay the timing of external trigger inputs or use the shield to avoid interference.**

Checking the view and installed distance

For IV series, installed distance between the view and object is different depending on the type of the sensor. Check the type of the sensor to be used and its view, and place it in the proper distance.

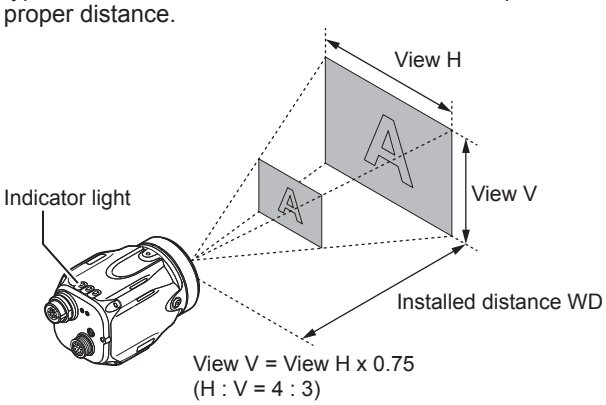

● Standard-range type (color / monochrome)

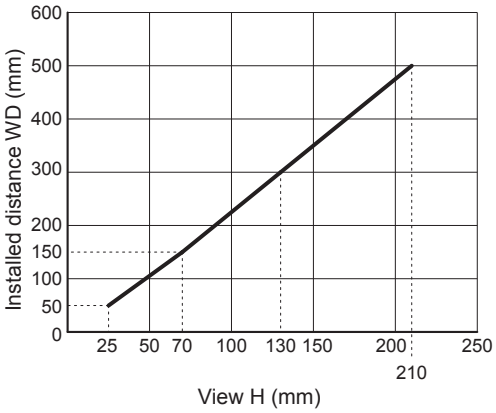

● **Short-range type**

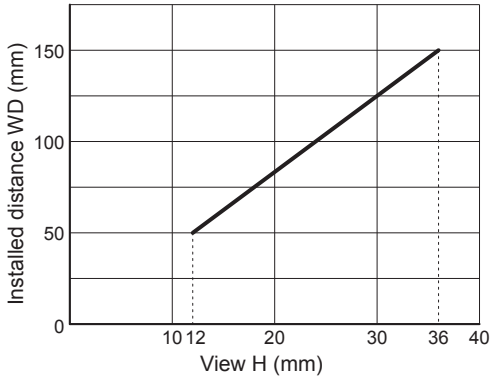

● **Long-rang type**

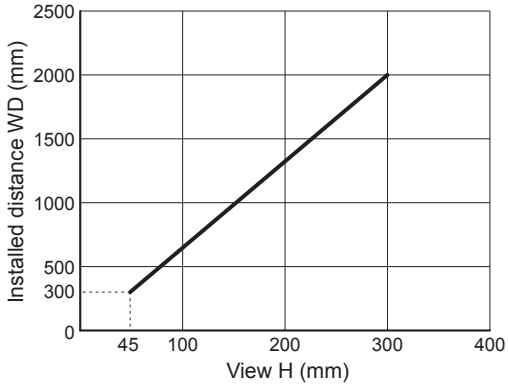

The value of View H and V will be a half of the value on the figures above when using the digital zooming function (monochrome type only).

Mounting the mounting adapter

Use the mounting adapter (accessory or OP-87460) to mount the sensor.

Point **The mounting adapter is mounted on the sensor in the default factory setting. Remove it from the sensor.**
“Unmounting the sensor” (Page 5)

■ Mounting on the wall

- Screw : M3 x 4
  Use the commercially available screws which have head thickness of 3 mm or lower.
- Tightening torque : 1.0 N·m or lower

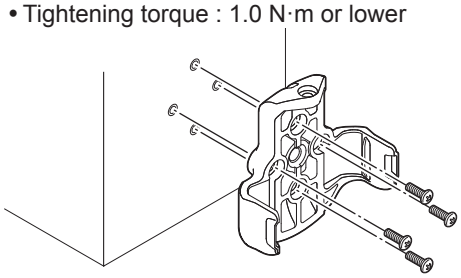

■ Mounting from the jig side

- Screw : M4 x 4
  Use the commercially available screws.
- Tightening torque : 1.5 N·m or lower

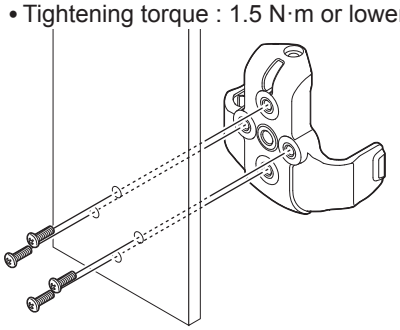

Reference For details on mounting hole dimensions, refer to “Dimensions” (Page 8).

Mounting the sensor onto the mounting adapter

1 Mount the sensor to the left and right stopper on the mounting adapter.
Sensors cannot be mounted on the side with the indicator light.

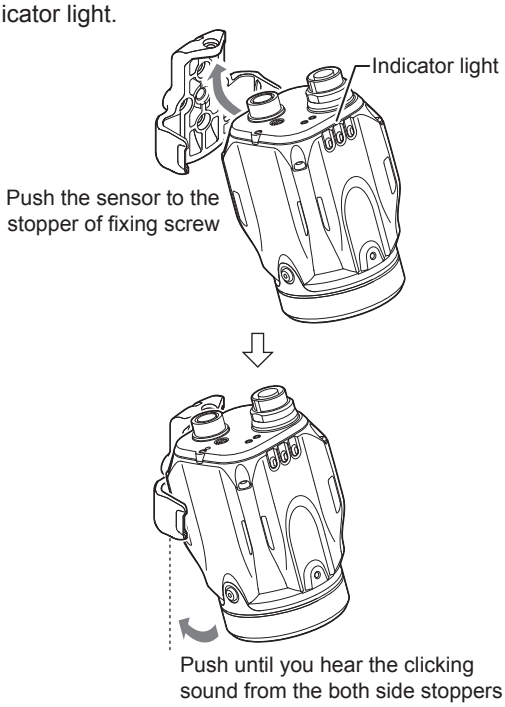

2 Fix the mounting adapter and sensor using the attached screws.

- Screw : M3 x 1
  Use the attached screws.
- Tightening torque : 0.45 to 0.55 N·m

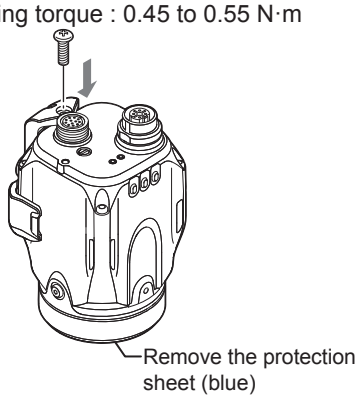

Unmounting the sensor

1 Dismount the screw.

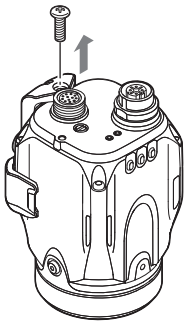

2 Pull out the stopper of the mounting adapter and unmount the sensor.

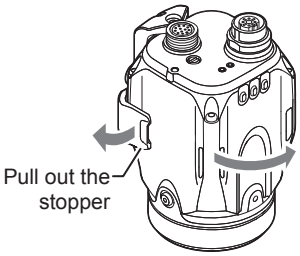

Cables

Connecting the power I/O cable of the sensor

1 Adjust the pins of the connector for the power I/O cable and pin connection of the cable connector, and connect the cable to the sensor.

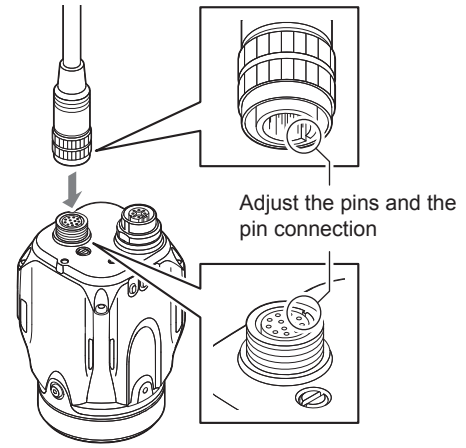

2 Tighten the connector by turning the screw-on connector in the clockwise direction.

Tightening torque of the screws needs to be 1.0 to 1.5 N·m.

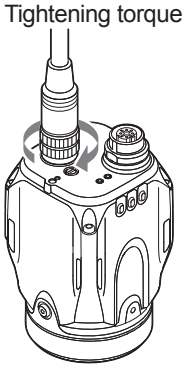

NOTICE	**When connecting the connector, insert it without tipping and tighten it well. If the tightening is weak, it may cause a bad connection and vibration can loosen the connector. Also, the enclosure rating may not be maintained with loose connection.** *** Indication is retightening approximately 90° to 120° with tools such as pliers after tightening with hands.**

3 Wire each cable according to its intended purpose.

● **Selecting NPN output**

When NPN is selected in I/O format

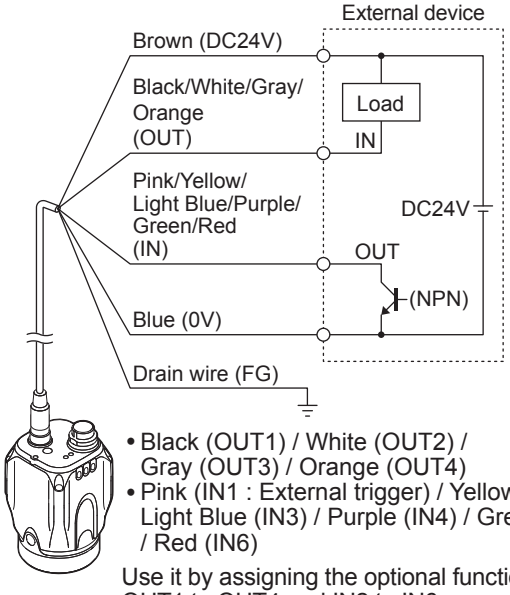

- Black (OUT1) / White (OUT2) / Gray (OUT3) / Orange (OUT4)
- Pink (IN1 : External trigger) / Yellow (IN2) / Light Blue (IN3) / Purple (IN4) / Green (IN5) / Red (IN6)

Use it by assigning the optional function to OUT1 to OUT4 and IN2 to IN6.

● **Selecting PNP output**

When PNP is selected in I/O format

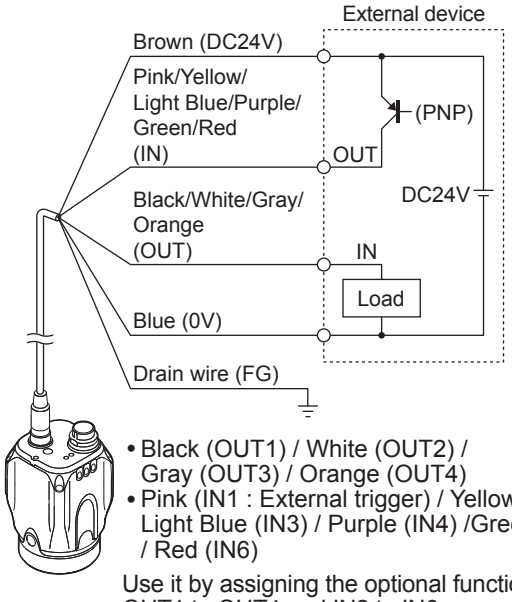

- Black (OUT1) / White (OUT2) / Gray (OUT3) / Orange (OUT4)
- Pink (IN1 : External trigger) / Yellow (IN2) / Light Blue (IN3) / Purple (IN4) /Green (IN5) / Red (IN6)

Use it by assigning the optional function to OUT1 to OUT4 and IN2 to IN6.

Wiring color	Name	Assigning default value	Description
Brown	DC24V	-	+ side of power
Blue	0V	-	- side of power GND of input-output cable
Black	OUT1	Total judge (N.O.)	Output assignable function • Total Status • Tot.StatusNG • RUN • BUSY • Error • Pos. Adj. • Judge result of each tool (Tool 1 to Tool 16) • Result of the logical operation of each tool (Logic 1 to Logic 4) • OFF (not used)
White	OUT2	BUSY (N.O.)	
Gray	OUT3	Error (N.O.)	
Orange	OUT4	OFF	
Pink	IN1	External trigger ↑	Set external trigger. Activation timing (↑) or deactivation timing (↓) can be set.
Yellow	IN2	OFF	Input assignable function • Program bit0 to bit4 • Clear error • External master • OFF (not used)
Light Blue	IN3	OFF	
Purple	IN4	OFF	
Green	IN5	OFF	
Red	IN6	OFF	
Drain	FG	-	Insulated frame
Cable specification			• Brown/Blue/Black/White/Gray/Orange : AWG25 • Pink/Yellow/Light Blue/Purple/Green/ Red : AWG28 • With braided shield cable (with drain cable)

Reference The output assignment, N.O./N.C., and input line assignment can be changed. For details, refer to the User's Manual.

NOTICE	**• Individually insulate the non-used input-output cables.** **• For input cables of this sensor, connect with non-contact output (transistor output/SSR output). For contact output (relay output), incorrect input may be operated due to the contact bouncing in the system.**

Circuit Diagram

Input circuit

■ No-voltage input (When NPN output is selected)

When NPN is selected in I/O format, the circuit becomes no-voltage input circuit. External power supply is not necessary.

- ON voltage : 2 V or lower
- OFF current : 0.1 mA or lower
- ON current : 2 mA (short circuit)

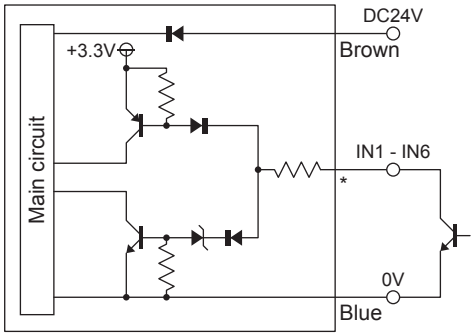

* Pink (IN1 : External trigger) / Yellow (IN2) / Light Blue (IN3) / Purple (IN4) / Green (IN5) / Red (IN6)
Use by assigning the optional functions to IN2 to 6

■ Voltage input (When PNP output is selected)

When PNP is selected in I/O format, the circuit becomes voltage input circuit.

- Input maximum rating : 26.4 V
- ON voltage : 15 V or higher
- ON current : 2 mA (for 24V)
- OFF current : 0.2 mA or lower

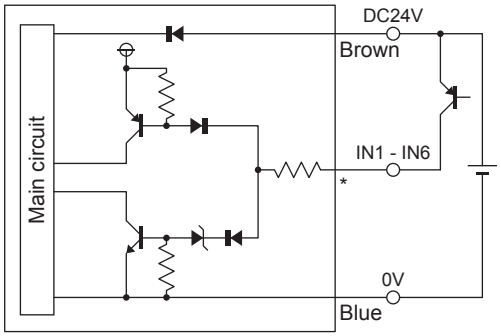

* Pink (IN1 : External trigger) / Yellow (IN2) / Light Blue (IN3) / Purple (IN4) / Green (IN5) / Red (IN6)
Use by assigning the optional functions to IN2 to 6

Output circuit

■ When NPN output is selected

When NPN is selected in I/O format, the circuit becomes open collector NPN output circuit.

- Maximum rating : 26.4 V, 50 mA
- Remaining voltage : 1.5 V or lower

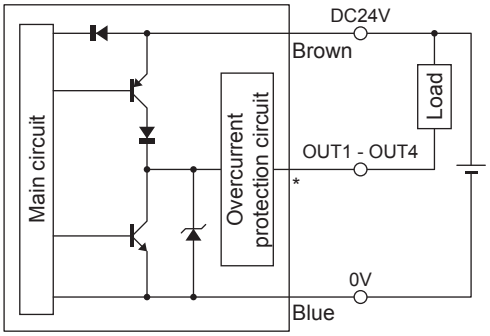

* Black (OUT1) / White (OUT2) / Gray (OUT3) / Orange (OUT4)
Use by assigning the optional functions to OUT1 to OUT4

■ When PNP output is selected

When PNP is selected in I/O format, the circuit becomes open collector PNP output circuit.

- Maximum rating : 26.4 V, 50 mA
- Remaining voltage : 2 V or lower

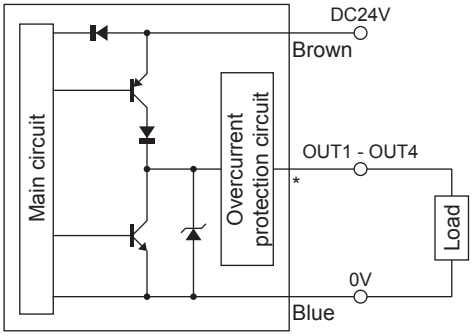

* Black (OUT1) / White (OUT2) / Gray (OUT3) / Orange (OUT4)
Use by assigning the optional functions to OUT1 to OUT4

Dimensions

Sensor

IV-500C / IV-500CA / IV-500M / IV-500MA / IV-150M / IV-150MA / IV-2000M / IV-2000MA

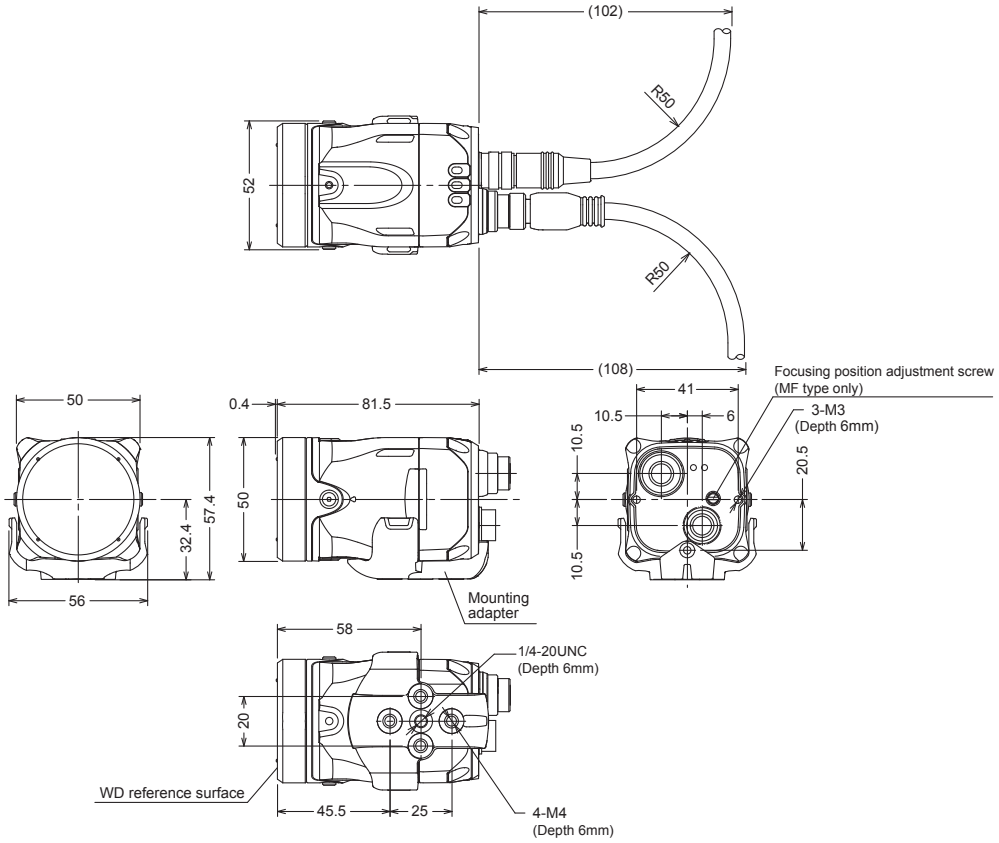

Power I/O cable

OP-87440 (2m) / OP-87441 (5m) / OP-87442 (10m)

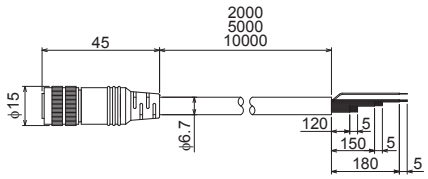

Bracket

OP-87685

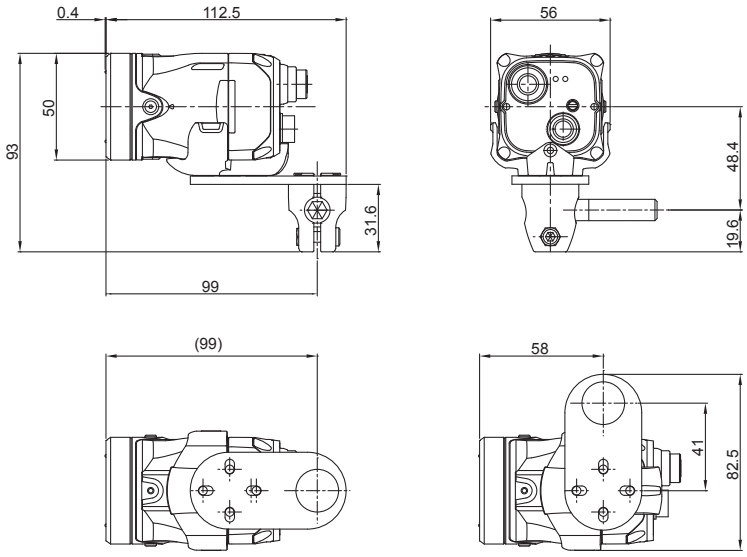

Specifications

Model		IV-500C	IV-500CA	IV-500M	IV-500MA	IV-150M	IV-150MA	IV-2000M	IV-2000MA
Installed distance		Standard distance (50 to 500 mm)				Short range (50 to 150 mm)		Long range (300 to 2000 mm)	
View		Installed distance 50 mm : 25 (H) x 18 (V) mm to Installed distance 500 mm : 210 (H) x 157 (V) mm				Installed distance 50 mm : 12 (H) x 9 (V) mm to Installed distance 150 mm : 36 (H) x 27 (V) mm		Installed distance 300 mm : 45 (H) x 33 (V) mm to Installed distance 2000 mm : 300 (H) x 225 (V) mm	
Image sensor		1/3 inch color CMOS		1/3 inch monochrome CMOS					
	Pixel	752 (H) x 480 (V)							
Focus adjustment		Manual	Auto [*1]	Manual	Auto [*1]	Manual	Auto [*1]	Manual	Auto [*1]
Exposure time		1/10 to 1/50,000		1/10 to 1/25,000		1/20 to 1/25,000		1/10 to 1/25,000	
Lights	Amplifier type	White LED		Red LED				Infrared LED	
	Lighting method	Pulse lighting/DC lighting is switchable							
Tools	Type	Outline search, Color area[*7], Area[*8], Position adjustment							
	Number[*2]	Detection tools : 16 tools, Position adjustment tool : 1 tool							
Switch settings (programs)		32 programs							
Image history [*3]	Numbers	100 images [*4]		300 images [*5]					
	Condition	NG only/All is selectable							
Analysis information[*6]		OFF/Statistics/Histograms is switchable Statistics : Processing time (latest value, MAX, MIN, AVE), numbers of OKs, numbers of NGs, trigger numbers, trigger errors, judge results list by tools Histograms : Histogram, matching degree (latest value, MAX, MIN, AVE), numbers of OKs, numbers of NGs							
Other functions		HDR, HighGain, Color filters[*7], Digital zoom[*8], Brightness correction, Tilt correction, White balance[*7], Mask outline, Mask area, Test run, ToolAutoTune, Input monitor, Output test, Security settings, Simulator[*9]							
Indicators		PWR/ERR, OUT, TRIG, STATUS, LINK/ACT							
Input		No-voltage input/voltage input is switchable For no-voltage input : ON voltage 2V or lower, OFF current 0.1mA or lower, ON current 2mA (short circuit) For voltage input : Maximum input rating 26.4V, ON voltage 15V or higher, OFF current 0.2mA or lower, ON current 2mA (for 24V)							
	Inputs	6 inputs (IN1 to IN6)							
	Function	IN1 : External trigger, IN2 to IN6 : Enable by assigning the optional functions Assignable functions : Program switching, Clear error, External master image registration							
Output		Open collector output NPN/PNP is switchable, N.O./N.C. is switchable For open collector NPN output : Maximum rating 26.4V 50mA, remaining voltage 1.5V or lower For open collector PNP output : Maximum rating 26.4V 50mA, remaining voltage 2V or lower							
	Outputs	4 outputs (OUT1 to OUT4)							
	Function	Enable by assigning the optional functions Assignable functions : Total judge result, RUN, BUSY, Error, Position adjustment result, Judge result of each tool, Result of the logical operation of each tool							
Ethernet[*10]	Standard	100BASE-TX/10BASE-T							
	Connector	M12 4pin connector							
Network function		FTP client, EtherNet/IP, PROFINET							
Rating	Power voltage	DC 24V ± 10% (including ripple)							
	Consumption current	0.6 A or less							
Environmental resistance	Ambient temperature	0 to +50°C (No freezing)							
	Relative humidity	35 to 85%RH (No condensation)							
	Vibration	10 to 55 Hz, 1.5 mm double amplitude, 2 hours each for X, Y, and Z axes							
	Shock resistance	500m/s^2 6 different directions in 3 times							
	Enclosure rating[*11]	IP67							
Material		Main unit case : Aluminum die-casting, Packing : NBR, Front Cover : Acrylic, Mounting adapter : POM							
Weight		Approx. 270 g							

*1 The focusing position can be automatically adjusted at the time of installation. Deactivated during the operation. The focusing position can be registered by programs.
*2 Tools can be installed by programs.
*3 Saves to the memory in the sensor.
The images saved in the sensor can be backed up to the USB memory installed to the intelligent monitor (IV-M30) or to the PC by the software for IV (IV-H1).
*4 When using the FTP client function ; 70 pictures
*5 When using the FTP client function ; 210 pictures
*6 This can be displayed on the intelligent monitor (IV-M30) or by the software for IV (IV-H1).
*7 Color type only.
*8 Monochrome type only.
*9 This function can be used with the software for IV (IV-H1).
*10 This is for connection with the intelligent monitor (IV-M30) or the software for IV (IV-H1).
*11 Except when polarized filter attachment (OP-87436/OP-87437) is mounted.

Warranties and Disclaimers

(1) KEYENCE warrants the Products to be free of defects in materials and workmanship for a period of one (1) year from the date of shipment. If any models or samples were shown to Buyer, such models or samples were used merely to illustrate the general type and quality of the Products and not to represent that the Products would necessarily conform to said models or samples. Any Products found to be defective must be shipped to KEYENCE with all shipping costs paid by Buyer or offered to KEYENCE for inspection and examination. Upon examination by KEYENCE, KEYENCE, at its sole option, will refund the purchase price of, or repair or replace at no charge any Products found to be defective. This warranty does not apply to any defects resulting from any action of Buyer, including but not limited to improper installation, improper interfacing, improper repair, unauthorized modification, misapplication and mishandling, such as exposure to excessive current, heat, coldness, moisture, vibration or outdoors air. Components which wear are not warranted.

(2) KEYENCE is pleased to offer suggestions on the use of its various Products. They are only suggestions, and it is Buyer's responsibility to ascertain the fitness of the Products for Buyer's intended use. KEYENCE will not be responsible for any damages that may result from the use of the Products.

(3) The Products and any samples ("Products/Samples") supplied to Buyer are not to be used internally in humans, for human transportation, as safety devices or fail-safe systems, unless their written specifications state otherwise. Should any Products/Samples be used in such a manner or misused in any way, KEYENCE assumes no responsibility, and additionally Buyer will indemnify KEYENCE and hold KEYENCE harmless from any liability or damage whatsoever arising out of any misuse of the Products/ Samples.

(4) OTHER THAN AS STATED HEREIN, THE PRODUCTS/SAMPLES ARE PROVIDED WITH NO OTHER WARRANTIES WHATSOEVER. ALL EXPRESS, IMPLIED, AND STATUTORY WARRANTIES, INCLUDING, WITHOUT LIMITATION, THE WARRANTIES OF MERCHANTABILITY, FITNESS FOR A PARTICULAR PURPOSE, AND NON-INFRINGEMENT OF PROPRIETARY RIGHTS, ARE EXPRESSLY DISCLAIMED. IN NO EVENT SHALL KEYENCE AND ITS AFFILIATED ENTITIES BE LIABLE TO ANY PERSON OR ENTITY FOR ANY DIRECT, INDIRECT, INCIDENTAL, PUNITIVE, SPECIAL OR CONSEQUENTIAL DAMAGES (INCLUDING, WITHOUT LIMITATION, ANY DAMAGES RESULTING FROM LOSS OF USE, BUSINESS INTERRUPTION, LOSS OF INFORMATION, LOSS OR INACCURACY OF DATA, LOSS OF PROFITS, LOSS OF SAVINGS, THE COST OF PROCUREMENT OF SUBSTITUTED GOODS, SERVICES OR TECHNOLOGIES, OR FOR ANY MATTER ARISING OUT OF OR IN CONNECTION WITH THE USE OR INABILITY TO USE THE PRODUCTS, EVEN IF KEYENCE OR ONE OF ITS AFFILIATED ENTITIES WAS ADVISED OF A POSSIBLE THIRD PARTY'S CLAIM FOR DAMAGES OR ANY OTHER CLAIM AGAINST BUYER. In some jurisdictions, some of the foregoing warranty disclaimers or damage limitations may not apply.

BUYER'S TRANSFER OBLIGATIONS:

If the Products/Samples purchased by Buyer are to be resold or delivered to a third party, Buyer must provide such third party with a copy of this document, all specifications, manuals, catalogs, leaflets and written information provided to Buyer pertaining to the Products/Samples.

E 1101-3

KEYENCE CORPORATION

1-3-14, Higashi-Nakajima, Higashi-Yodogawa-ku,
Osaka, 533-8555, Japan
PHONE: +81-6-6379-2211

www.keyence.com

AUSTRIA
Ph: +43 2236 378266 0

BELGIUM
Ph: +32 15 281 222

BRAZIL
Ph: +55-11-3045-4011

CANADA
Ph: +1-905-366-7655

CHINA
Ph: +86-21-3357-1001

CZECH REPUBLIC
Ph: +420 220 184 700

FRANCE
Ph: +33-1-56-37-78-00

GERMANY
Ph: +49-6102-3689-0

HONG KONG
Ph: +852-3104-1010

HUNGARY
Ph: +36 1 802 73 60

INDIA
Ph: +91-44-4963-0900

INDONESIA
Ph: +62-21-2966-0120

ITALY
Ph: +39-02-6688220

KOREA
Ph: +82-31-789-4300

MALAYSIA
Ph: +60-3-7883-2211

MEXICO
Ph: +52-55-8850-0100

NETHERLANDS
Ph: +31 40 20 66 100

PHILIPPINES
Ph: +63-2-8981-5000

POLAND
Ph: +48 71 36861 60

ROMANIA
Ph: +40 269 232 808

SINGAPORE
Ph: +65-6392-1011

SLOVAKIA
Ph: +421 2 5939 6461

SLOVENIA
Ph: +386 1 4701 666

SWITZERLAND
Ph: +41 43 455 77 30

TAIWAN
Ph: +886-2-2721-8080

THAILAND
Ph: +66-2-369-2777

UK & IRELAND
Ph: +44 1908-696-900

USA
Ph: +1-201-930-0100

VIETNAM
Ph: +84-24-3772-5555

Specifications are subject to change without notice.

A6WW1-MAN-1109

Copyright (c) 2019 KEYENCE CORPORATION. All rights reserved.

12230GB 1109-3 96M12230 Printed in Japan

96M12230-3