RODIX INCORPORATED

TOLL FREE (800) 562-1868, FAX (815) 316-4701
E-mail custserve@rodix.com
rodix.com

FEEDER CUBE ®

FC-205, P/N 121-000-2005

OPEN FRAME MODEL
IMPORTANT: APPLICATION NOTE

CERTIFIED SAFETY
File No. E183233

Input: 120 VAC, 50/60 HZ.
(Operating range 90-130 VAC)
Single Unit Fuse Size: 15 AMPS
Output: 0-120 VAC
100% Duty Cycle 0.6-12A, 80% for 13-15A
Circuit Board P/N 24-200

Model Information: This control is based on the FC-200 Series Part Sensing Feeder Cube®. The start/stop operation of the output can be controlled with an optional parts sensor. For more information on this control, refer to the enclosed Adjustments and Set Up pages.



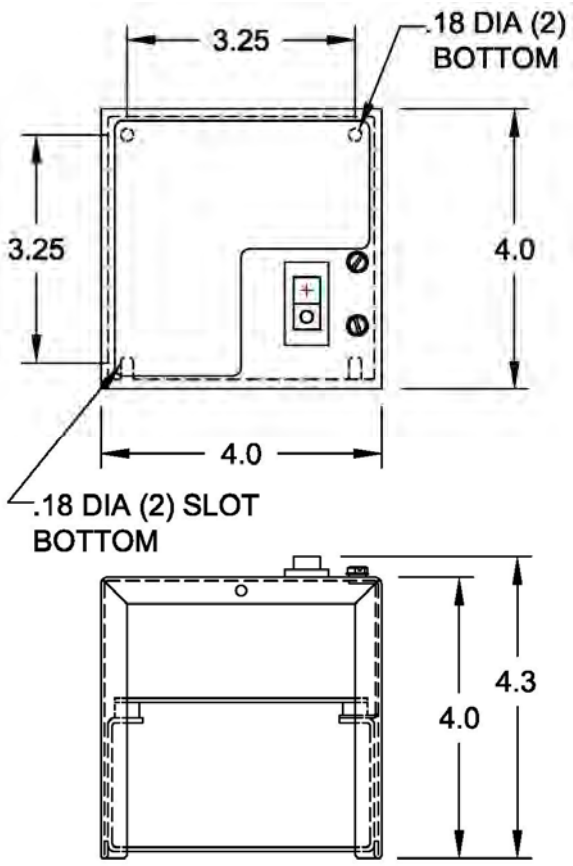

© 2009, 2018 RODIX INC.

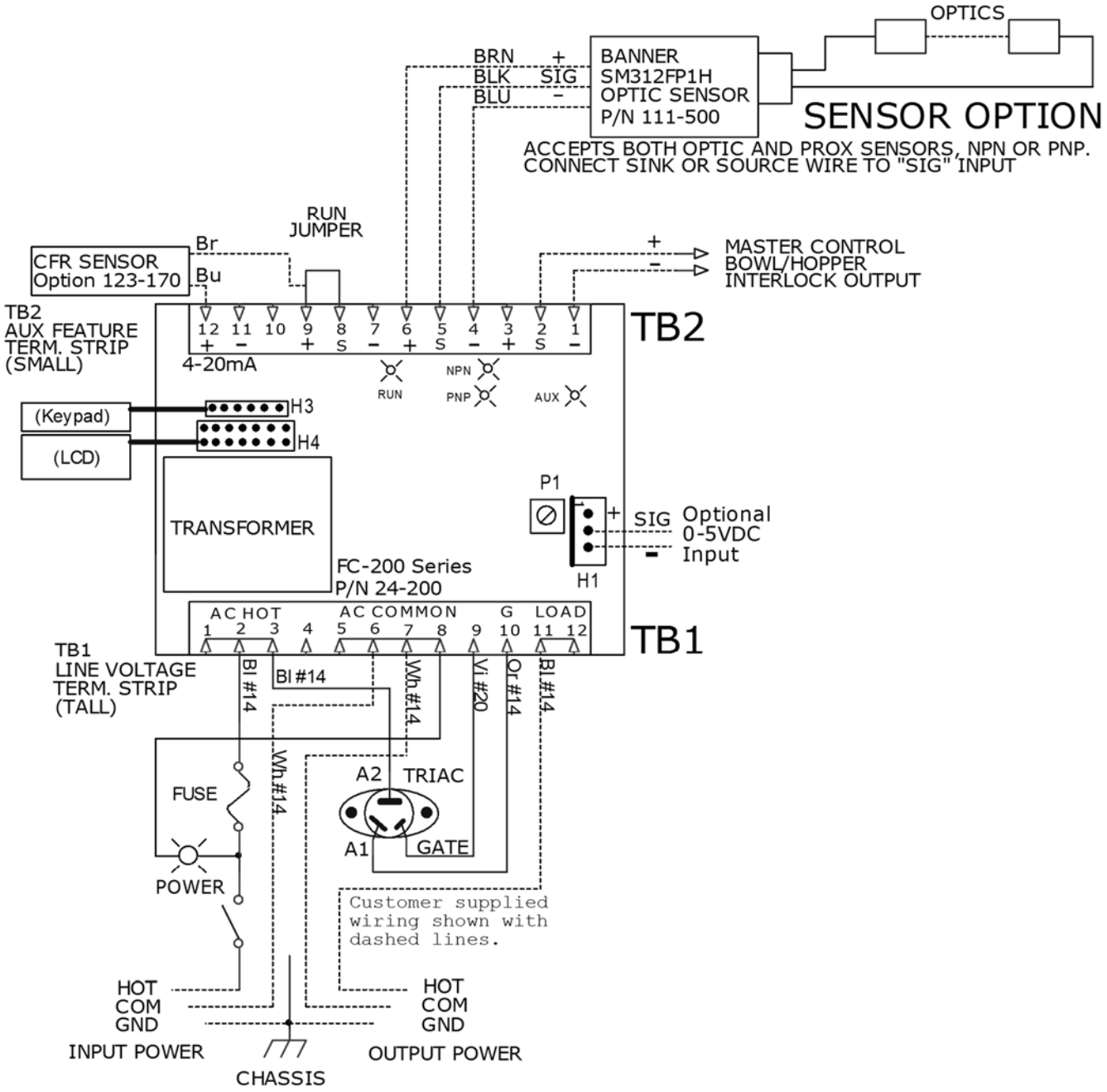

RODIX INC.
FEEDER CUBE®
FC-200 Series
WIRING DIAGRAM

RUN JUMPER INPUT

A) LOW CURRENT SWITCH

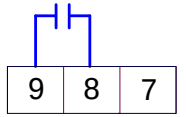

FC-200 PLUS SERIES TB2

B) FEEDER BOWL/HOPPER INTERLOCK

FC-200/90 PLUS SERIES TB2, OUTPUT

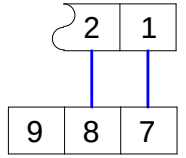

FC-200 PLUS SERIES TB2, INPUT

C) LOW VOLTAGE INPUT SWITCHING

(DC Voltage from PLC)
5-30 VDC INPUT VOLTAGE
OFF/ON CONTROL

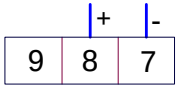

FC-200 PLUS SERIES TB2

MODEL	INPUT VAC	AMPS	OUTPUT
FC-205	120 VAC	15	0-120 VAC

RODIX, INC.
2316 23rd Ave., Rockford, IL 61104
Toll Free (800) 562-1868, FAX (815) 316-4701
Email custserve@rodix.com
www.rodix.com

RODIX INC.
FEEDER CUBE ®
FC-200 SERIES

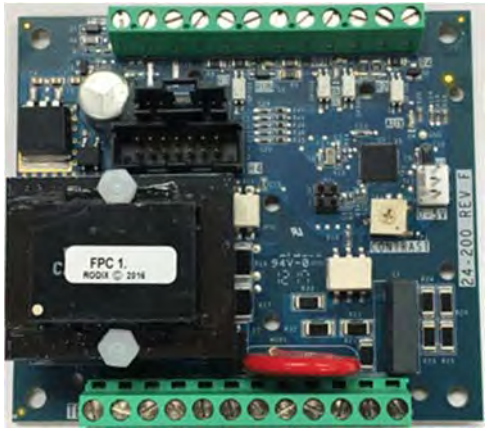

FC-200 Series Application Note

For Circuit Boards P/N's
24-200 (120V) and 24-201 (208-240V)

General Description

The FC-200 Series Controls are often used to operate vibratory bowls equipped with part sensors or storage hoppers fitted with electronic bowl level detectors. The 12VDC power supply and sensor time delays are provided by the control. The demand cycling of the bowl is controlled by the parts sensor's output and the control's On and Off time delay settings.

Standard features include an interlock output, enable input, soft start adjustment, minimum and maximum output adjustments, full wave/half wave selection, line voltage compensation, 4-20mA and 0-5vdc amplitude control. The optional CFR vibration sensor, P/N 123-170, can provide feedback to help maintain a constant part feed rate.

The FC-200 Series Feeder Cube® is a completely digital feeder control. All of the set up and adjustments are performed through the keypad on the front cover. With an easy to read LCD display, the feed rate, sensor status, and control status are easily observed.

© 2009, 2017 RODIX INC.

ADJUSTMENTS & SET UP

ELECTRICAL CONNECTIONS:

Make the electrical connections prior to plugging the control in and turning it on. Once connections are made to the feeder control, any desired software settings changes can be made with the cover closed.

1. PARTS SENSOR

(Photo-sensor or Proximity Switch)

Connect a three wire, current-sourcing (PNP) or current-sinking (NPN) sensor as shown on the enclosed wiring diagram. The sensor must be able to operate on 12VDC and switch 3mA. The default setting is a universal sensor input.

2. RUN JUMPER INPUT

The Run Jumper Input comes with a factory installed jumper wire. If the Feeder Cube® will be controlled by a relay contact, switch, or other device, replace the factory-installed jumper with a "Run Contact" at terminals 8 and 9 of TB2. The contact will switch 12VDC and 2.0 mA. The control will run only when the contact is closed and the parts sensor is calling for parts. For PLC control, remove the Run Jumper and connect the 24V PLC output to TB-2 terminals 8 (+) and 7 (-). If electrical isolation is desired, remove R3. R3 is located on the circuit board near TB2-8.

In the High/Low parts sensing mode, a second parts sensor can be connected to the run contact input in place of the run jumper. Each parts sensor should be a PNP type and have the same logic (L.O. or D.O.).

3. AUXILIARY OUTPUT

The Feeder Bowl/Hopper Interlock feature (TB2-1 & 2) can be connected to a Rodix FC-40, FC-90, FC-200 or VF Series control when control of a bulk material hopper is needed. The interlock will prevent the hopper from operating anytime the bowl is turned OFF or in "STAND BY" mode. The Auxiliary Interlock output can also be used to drive a solid state relay or a low wattage 12VDC air valve. A solid state relay can operate any auxiliary equipment such as a light stand or an air valve. To monitor the Auxiliary Output with a PLC see the details in the Advanced FC-200 Application Note. The Interlock output is capable of 12 VDC at 50 mA. The Auxiliary output is capable of switching 70 mA if an external power source is used. Two FC-200 Series controls can be interlocked. Download the FC-200-2 Application Note for wiring information.

A 0.6 Watt 12VDC solenoid can be driven by the Aux output. See the wiring diagram for proper connections.

4. INTERNAL POWER SUPPLY

At the rated line voltage, the line isolated power supply is capable of providing a combined total current of 65 mA at 12 VDC (35 mA when using a 200VAC line on 240VAC models). The total current includes the parts sensor, CFR sensor and any auxiliary output accessories that are connected to the Bowl/Hopper Interlock terminals.

5. REMOTE SPEED CONTROL CONNECTIONS

The following methods of remote power level control can be utilized when desired:

A. The Constant Feed Rate (CFR) feature: Attach a CFR sensor to terminals TB2-12 (blue) and to TB2-9 (brown).
B. 4-20mA or 0-20mA signal can be connected by bringing the positive signal wire to TB2-12 and ground to TB2-11.
C. 0-5VDC Analog input signal can be connected to connector H1. This can be selected to ignore any connections to the CFR/4-20mA input. Control cable P/N 123-145 is sold separately.

Section 14 explains how to enable these features.

6. OUTPUT CONNECTIONS

The 120VAC models in general purpose enclosures provide a standard North American receptacle (NEMA 5-15R) for connection to the feeder. 240V models have a pigtail output cord. Power cords are optional on Oil Resistant models.

7. LINE VOLTAGE CONNECTIONS

The 120VAC models can operate from a power line providing from 108 to 132VAC. The plug can be connected to a standard North American outlet. The outlet should be properly grounded. The 240VAC models can operate from 200 to 265VAC. The control should be grounded properly.

SOFTWARE ADJUSTMENTS:

DISPLAY MESSAGES: The normal operating display shows the status of the control with regard to input signals and control settings. See the "Menu Layout" page for message details.

SOFTWARE ADJUSTMENTS: Once the electrical connections have been made, the control settings can be adjusted as desired through the control's menu.

NAVIGATING THE CONTROL MENU: The control uses four keys to program the control. The fifth key, "1/0" is for on/off operation.

A. The **ENTER** key allows entry to the menu and access to adjust each setting. Pushing the enter key once allows entry to program or the security code if the security feature has been enabled. Once inside the menu, the enter key selects a menu item or a parameter to adjust.
B. The **BACK** key moves the current menu location a level higher than it was before. It is also used to get back to the normal operating display.
C. The **Arrow Down** key allows the user to step down through the program menu or to decrease a setting.
D. The **Arrow Up** key allows the user to step up through the program menu or to increase a setting.
E. The **1/0** key allows the user to temporarily stop or restart the control's operation.

See the "Menu Layout" page for the menu structure. When in the menu mode and no keys are pressed for 1 minute, the display reverts to the normal operating display.

8. PARTS SENSOR SET UP

Set up the parts sensor through the "Function Settings" sensor logic and sensor output type menu.

A. The "NORMAL" setting works with most PNP and NPN sensors. If the sensor input does not seem to switch, set the sensor type to PNP or NPN to match the sensor type. The sensor input status can be monitored on the LCD; S=0 or 1.
B. The control comes preset to work with inverted sensor logic. Set control for the type of sensor logic being used: "Normal" for through beam optics or "Inverted" for proximity or retro-reflective optics.

9. POWER OUTPUT SETTING

The output power is controlled by the UP and DOWN arrow keys. The power setting can be adjusted unless the security feature lock has been selected. Once the proper security code has been entered, the power may be adjusted under the "Power Settings" menu. Note: the power setting may not be adjusted above the maximum power setting or below the minimum power setting level. The max and min power settings automatically change the power setting to keep it in the correct range.

10. PULSE MODE OPERATION

The "Power Settings" menu controls the pulse mode settings. The pulse mode can be set for 120, 60, 60-reverse, 40 or 30 pulses. The correct pulse setting depends on what the feeder was tuned to operate at.

A. 120 pulses per second is the default setting.
B. 60 pulses per second (half wave) can be selected from the pulse settings menu.
C. 60 reverse indicates the opposite side of the half wave sin wave is used). This can be helpful for two different situations. When a changing the amplitude on one feeder influences the amplitude of the second feeder, reversing the 60 pulse output sometimes may solve a mechanical interaction between two feeders on the same machine table. Secondly, the apparent power from the utility can be reduced if the power can be balanced when some feeders are set to 60 pulse and some are set to 60 reverse pulse. To activate it, set the pulse mode to "60 Rev."
D. 40 or 30 Pulse can be selected in the pulse mode menu. For useful vibration, the feeder has to have the proper amount of springs.

11. LIMITING MAXIMUM POWER

The maximum power (Max Pwr) setting can be lowered to keep the operators from setting the vibration higher than desired. The maximum power setting can be found under the "Power Settings" menu. It can be adjusted from 100.0% down to 40.0%.

12. MINIMUM POWER OUTPUT

The minimum power (Min Pwr) output level can be adjusted to the desired low level of vibration. The minimum power setting can be found under the "Power" menu. It can be adjusted up from 0.0% to 60.0%. Note: the software does not allow the minimum level to be within 6.4 counts of the maximum level.

13. SOFT-START

The start-up of the control's output can be adjusted to ramp up to the desired output level instead of starting abruptly. Soft-start keeps parts from falling off the tooling, reduces spring shock and hammering when the control turns ON. The soft start setting can be found under "Power" menu. The soft start can be set from 0.0 to 10.0 seconds.

14. REMOTE SPEED CONTROL

The feeder control's power level can be controlled by an external signal from a PLC or other source. Selections are made under the "Power Settings" menu. See section 5 for connection details.

A. The Constant Feed Rate (CFR) feature comes preset in the control. Attach a CFR sensor to terminals TB2-12 (blue) and to TB2-9 (brown). Turn the power switch on, and the control should display "CFR" in the status line showing that it is connected. Set the power setting to the desired feed rate. **The CFR set point can also be set remotely by applying a 0-5VDC signal to connector H1.** Purchase cable P/N 123-145.
B. A 4-20mA or 0-20mA signal from a PLC can be used to remotely vary the output of the control instead of the keypad. Once selected, the control will automatically turn ON whenever a signal is applied (terminals 11 & 12 of TB2). At 0mA the keypad may be used. The 0-20/4-20mA input is transformer isolated from the power line.
C. 0-5VDC Analog input signal can control the feeder's amplitude. Use cable P/N 123-145.

15. SETTING THE TIME DELAYS

The ON and OFF sensor time delays are set independently for a period of 0-25 seconds. The time delay settings can be adjusted to provide the best individual response for the feeder. The time delays can be found under the "Timer Settings" menu.

16. LINE VOLTAGE COMPENSATION

Fluctuations in the line voltage can cause a feeder bowl to vary its feed rate. The line voltage compensation feature adjusts the control's output to help compensate for fluctuations in the supply voltage. If it becomes necessary to disable this feature, the LV Comp setting can be changed to "Disable". It is found under "Power Settings" menu.

17. RUN MODE SETTINGS

The "Function Settings" menu controls the feed logic.

A. The control comes preset for normal on/off sensor operation.

B. The "Constant On" feature can be used to keep the bowl running while the Aux output switches a device (air valve) to blow the unneeded parts back into the bowl.

C. The "2-Speed" feature allows the bowl to slowly trickle parts on low speed and to feed parts at full speed when the sensor signals parts are needed.

D. The "high/low" function keeps the parts level between the high and low parts sensors on the track. The second sensor (PNP) gets installed in place of the run jumper.

E. The Run Input can be set to "Disable" to ignore the interlock signal from another control board. Changes to the interlock wiring are not needed.

F. The Empty Bowl Timer feature is used to turn the feeder off when no parts have broken the sensor field from the settable range of 5 - 240 seconds. The feature's default setting is off, but it can be activated under the "Timer Settings" menu. An auxiliary output can be set up to activate a signaling device such as a light stand or strobe light when the empty bowl timer is tripped. See section 18 for auxiliary output set up instructions.

18. AUXILIARY OUTPUT SET UP

The "Function Settings" menu controls the auxiliary output (Aux Out) operation.

A. The control comes preset for the auxiliary output to turn on and off with the output of the feeder.

B. The auxiliary output signal can be inverted from the output of the feeder. Set the "Aux Out" parameter to "Invert" for an inverted output signal.

C. The auxiliary output signal can be set as an alarm to indicate when the bowl out-of-parts timer has stopped the feeding of the bowl. Set the "Aux Out" parameter to "Alarm" to activate it.

D. The auxiliary output signal can be set to invert the alarm when the bowl out-of-parts timer has stopped the feeding of the bowl. Set the Aux Out parameter to "Inv Al" to activate it.

E. The auxiliary output signal can be set so that a customer supplied air solenoid is activated 1 second before feeding begins and continue for 4 seconds after feeding ends. This feature is helpful for parts orientation. Set the "Aux Out" parameter to "Air Jet" to activate this feature.

19. DIAGNOSTICS

A. The first menu item under the "Diagnose Info" menu shows the software revision level.

B. The next item under the software revision level shows certain software registers that may be helpful to Rodix staff while troubleshooting.

20. SECURITY SETTINGS

The "Security Settings" menu controls access to the control settings. When enabled, a security code number may be chosen from 00 to 255. The preset code is 00.

A. The "Unlock" setting allows menu access to all control adjustments and features.

B. The amplitude only (Amp Adj) adjustment allows operators to adjust the amplitude through the normal operating display. All other settings can only be adjusted after entering the security code.

C. The "Lock" setting locks the control from any adjustment without the use of the security code.

If the security code has been forgotten, press the enter key to bring up the security code. Next, push and hold the back key until the menu appears. This sequence bypasses the security code.

21. DEFAULT MEMORY

Once a feed system has been set up properly, the Feeder Cube's set-up should be saved into the "User Save" memory location. If an operator makes wrong adjustments, the "Restore User" feature can restore the control to the known good set up. The restore factory defaults selection will put the original factory settings into memory.

22. LANGUAGE

The programming menus can be displayed in English, Spanish (Espanol), French, German (Deutz).

23. INSTALLING THE CFR SENSOR

Note: Failure to adequately prepare the feeder's surface properly may result in a Constant Feed Rate (CFR) sensor that will not bond to the feeder. The sensor will not be mounted until step C-6.

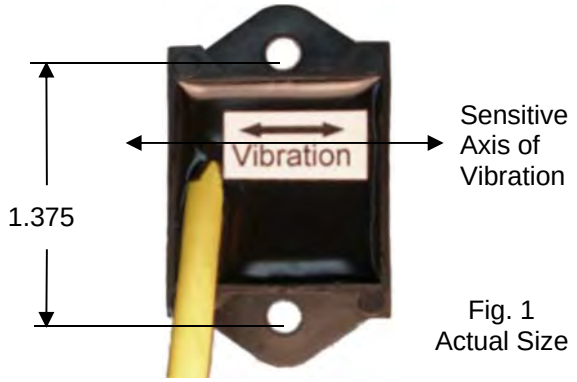

Fig. 1
Actual Size

A. ORIENT THE SENSOR so that its sensitive axis is in the same direction as the vibration of the feeder. The arrow in figure 1 shows the sensor's sensitive axis. Align the sensitive axis of the sensor in the same direction as the vibration (see figure 2). The sensor must be oriented correctly for proper operation.

B. CHOOSE A LOCATION for mounting the sensor on the feeder that is smooth and that will allow the adhesive on the sensor to bond. Avoid mounting the sensor over ridges and bumps which can reduce the ability of the adhesive to stick to the feeder. The correct location will also have enough space for the sensor's cable to hang straight down without touching anything else.

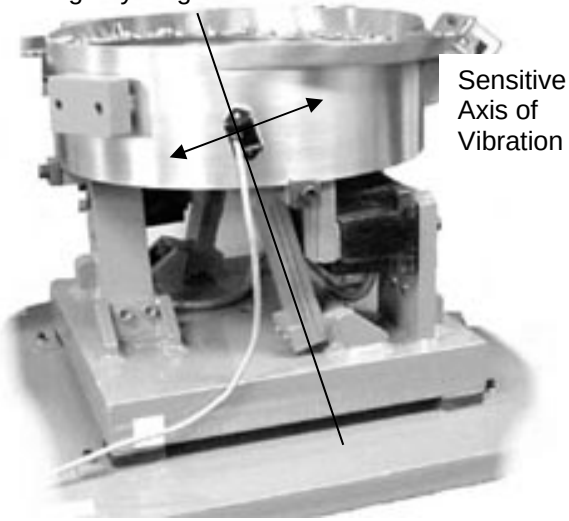

Fig. 2 The arrow shows the direction of vibration which is at a right angle to the spring pack.

C. SURFACE PREPARATION of the feeder is crucial for proper bonding between the sensor and the feeder. Please follow these steps completely.

1) The feeder should be kept between 70°-100°F (21-38°C) for ideal tape application.
2) Clean a 3.5" (10cm) circular area with a solvent like isopropyl alcohol that will not leave a residue. As a rule of thumb, the area can be considered clean when after cleaning the area with a solvent-saturated, white paper-towel, the towel is as clean as it was before wiping.
3) Using a good amount of pressure, polish the cleaned, circular area of the feeder using a scratch pad or steel wool. Repeat step 2, and then go to step 4.
4) Wipe the cleaned surface with an alcohol wipe or with a 50/50 isopropyl alcohol/water combination.
5) Dry the surface thoroughly using a low lint cloth or a clean paper towel.
6) Remove the vibration sensor from its protective packaging. Remove the liner from the adhesive backing. Avoid touching the tape. Align the sensor as shown in figures 1 and 2. Apply the vibration sensor to the prepared area of the feeder. Press the sensor very firmly onto the feeder surface for at least 10 seconds.
7) Allow the vibration sensor at least 20 minutes to cure before operation. Note it takes 72 hours for the adhesive to fully cure at 70°F (21°C).

Alternatively, #8 or M4 screws can be used to mount the sensor to the feeder. The hole centers are 1.375" (3.49cm) apart.

D. ROUTE THE SENSOR CABLE to protect it from strain due to vibration. The cable that attaches to the sensor will not break from normal vibration; however, some care should be used when routing the sensor cable from the sensor to the control. The cable should hang straight down from the sensor without touching the feeder bowl or anything else. Then, the sensor cable should curve towards the power control with a bend radius larger than 3" (8cm).

Use a cable tie and an adhesive-backed mount to attach the sensor cable to the side of the drive base. See Figure 2. Clean the mounting area before applying the adhesive-backed mount.

E. CONNECT THE SENSOR to the control. The sensor's brown wire connects to +12VDC at TB2-9. The blue wire connects to the signal input at TB2-12.

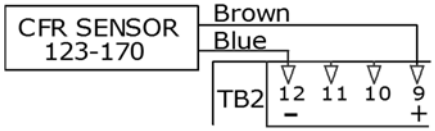

F. Section 14 explains how to enable the CFR feature.

24. CFR Positive and Negative Gains

The rate of response to vibration-changes can be adjusted using the Positive and Negative Gain settings. Oscillations can be reduced by lowering the CFR positive and negative gains or detuning the feeder slightly by adding or removing a spring.

25. CFR Set Point Adjustment

The CFR set point adjusts the amplitude vibration level that the control regulates to. The CFR Set Point changes when the amplitude of the control is adjusted. For better repeatability, the CFR set point can be precisely adjusted in the Power Settings menu.

The CFR set-point can be adjusted by a PLC. Connect the PLC to the 0-5VDC Analog input and verify the "Ext Sig" sub menu selection is set to CFR mode. Purchase cable 123-145.

26. Troubleshooting

If the feeder is not running, the status line on the LCD displays the reason the control is not feeding. The status line displays the highest priority message. The status line message definitions can be found on the FC-200 Series Menu Layout page under the section titled "Normal Display Message Priority".

The LED's on the circuit board show the status of the Run, PNP, NPN inputs and the Aux output. The wiring diagram references the location of the LEDs on the circuit board. The "Run" LED must be lit and the sensor type and logic must be set properly for the control to operate. If no parts sensor is connected, set the sensor logic setting to "Invert". If the sensor appears to work, but the control's display does not register a change in sensor status (S=1 or 0), set the sensor type to PNP or NPN so it matches the sensor's output type. If the feeder only hums, change the pulse mode setting.

For more troubleshooting helps, download the FC-200 Troubleshooting Guide at www.rodix.com.

WARNING:

Fuses should be replaced with Bussman ABC or Littelfuse 3AB "Fast Acting" type or equivalent of manufacturer's original value.

Mounting this control on a vibrating surface will void the warranty.

WARRANTY

Rodix Control Products are Warranted to be free from defects in material and workmanship under normal use for a period of two years from date of shipment. For the full description of the warranty, terms, and software license, please contact the factory.

For assistance installing or operating your Rodix Feeder Cube® please call the factory or visit our web site. Technical help is available to answer your questions and email any needed information. To return a control for IN or OUT of warranty service, please ship it prepaid to:

Rodix Inc., ATTN: Repair Department

If under warranty, Rodix will repair or replace your control at no charge; If out of warranty, we will repair it and you will be billed for the repair charges (Time and Material) plus the return freight. Quotes for repairs are available upon request. A brief note describing the symptoms helps our technicians address the issue.

Feeder Cube® is a registered TM of Rodix Inc.

Banner® is a registered Trademark of Banner Engineering Corp, 9714 10th Ave, Minneapolis, MN 55441

RODIX, INC.
2316 23rd Ave., Rockford, IL 61104
Toll Free (800) 562-1868, FAX (815) 316-4701
E-mail custserve@rodix.com
rodix.com

FC-200 Series Menu Layout

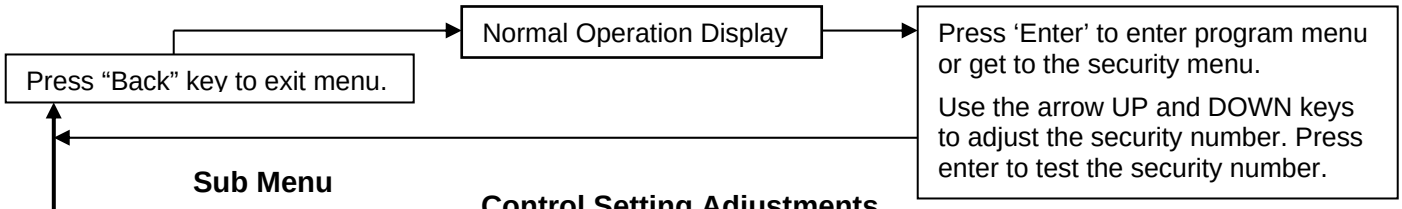

Main Menu

Sub Menu	Control Setting Adjustments
Power Settings	
Power	[**0.0** to 100.0] % (amplitude or power setting)
Max Pwr	[**100.0** to 20.0] % (maximum power level)
Min Pwr	[**0.0** to 60.0] % (minimum power level)
Soft	[0.0 to 10.0] Seconds (soft start time) (Default **0.1**)
Pulse Md	[**120**, 60, 60 Rev, 40, 30] (magnetic pulses per second)
Ext Sig	[**CFR**, 4-20mA, 0-20mA, 0-5VDC] (external amplitude input)
CFR SetP	[**0.0** to 101.0] Set Point for CFR vibration level
Pos Gain	[1 to 100] Positive CFR compensation gain (Default **8.0**)
Neg Gain	[1 to 100] Negative CFR compensation gain (Default **12.0**)
LV Comp	[**Normal**, Disable] (line voltage compensation)
Pw Curve	[**Normal**, Log] (amplitude power curve slope)
Timer Settings	
On Delay	[0.0 to 25.0] Seconds (Default **2.0**)
Off Dly	[0.0 to 25.0] Seconds (Default **2.0**)
Empty B	[5 to 240] Seconds; (empty bowl timer or jam timer) (Default **10**)
Function Settings	
Sens Log	[Normal, **Inverted**] (sensor logic)
NPN/PNP	[**Normal**, NPN, PNP] (sensor output type) Note: Normal uses active input, PNP/NPN.
Run Mode	[**Normal**, Constant On, 2-Speed, High/Low] (how sensors control the feeder)
Run Input	[**Normal**, Disable] (Disable causes the control to ignore the Run Input)
Empty B	[**Normal**, Enable] (empty bowl timer reaction)
Aux Out	[**Normal**, Inverted, Alarm, Alarm Inv, Air Jet] (auxiliary output logic)
Diagnose Info	
Software	[Revision Level] (software revision level)
I/O Stat	[xxxxxxxx] (factory use)
Security Settings	
Keypad	[**Unlock**, Amp Adj, Lock] (security limits access to allowable features)
Sec Code	**[00** to 255] (security number)
Default Settings	
User Restore	['Enter' Restores User Defaults] (restores final set-up for feeder)
User Save	['Enter' Saves User Defaults] (saves final set-up of feeder)
Factory Restore	['Enter' Restores Factory Defaults] (restores as it came from the factory, bold text)
Language Select	
Language	[**English**, Spanish, French, German] (select desired language)

Normal Display Message Priority

The normal operating display shows the status of the control with regard to input signals and control settings. They are listed from highest to lowest in priority. The highest priority message takes precedence over all other messages.

OFF The 1/0 button has been pushed to disable control operation.

Stop The run jumper has not been not made.

Full The parts sensor logic is telling the control to stay off.

Empt Empty bowl timer has timed out because parts did not pass by the parts sensor for a certain time.

Ext. An external signal is in control of the speed input.

Low Low Speed used when 2 speed has been selected and the sensor is not made.

0Spd The output is off because the output is set to 0.0%.

CFR The CFR function is operating, and the feeder is running normally.

Run The feeder is running normally.

Sensor Status Messages

S=1 The parts sensor indicates parts are needed.

S=0 The parts sensor indicates parts are not needed.

= The Flashing equal sign indicates the parts sensor is timing prior to changing the output state.

Power Setting Messages

Mn Mn indicates the power setting is at the minimum amplitude.

Mx Mx indicates the power setting is at the maximum amplitude.

RODIX INC.
FEEDER CUBE®
RODIX SOLUTION .408

RODIX SOLUTION

Good wiring practices for avoiding electrical noise problems.

Rodix controls have been designed with a high degree of immunity to electrical noise; however, depending on the control installation, electrical noise can cause problems. These problems occur in less than 1% of the product installations. Most electrical noise problems can be avoided by following some simple guidelines. Good wiring practices need to be used to prevent electrical noise from interfering with your control's operation. Another name for electrical noise is Electro-Magnetic Interference (EMI).

Symptoms of Electrical Noise

The symptoms of electrical noise would appear as follows: a brief pause or a brief "bump" in the vibratory feeder's output that the control automatically recovers from. In rare cases the control will either stop operating or run continuously at full power in 120 pulse mode until the power switch is slowly cycled OFF and ON.

Sources of Electrical Noise

Electrical noise is generated by devices like relay coils, solenoid valves, contactors, servo motors, and variable frequency inverter drives. The electrical noise is then transferred to another device by one of three ways. The noise could be conducted through the power wires, or capacitively coupled from wire to adjacent wire, or it is transmitted from the wires of a nearby noise source.

Solutions for Electrical Noise

1. Use shielded wires for all I/O (Input / Output) signals. The I/O signals may include: 4-20mA input, Run input, Sensor input, 0-5VDC input, Interlock input or AUX output. The shield "drain" wire should be tied to the chassis in the Rodix control. The drain wire should be kept shorter than 2". Please see the enclosed picture.

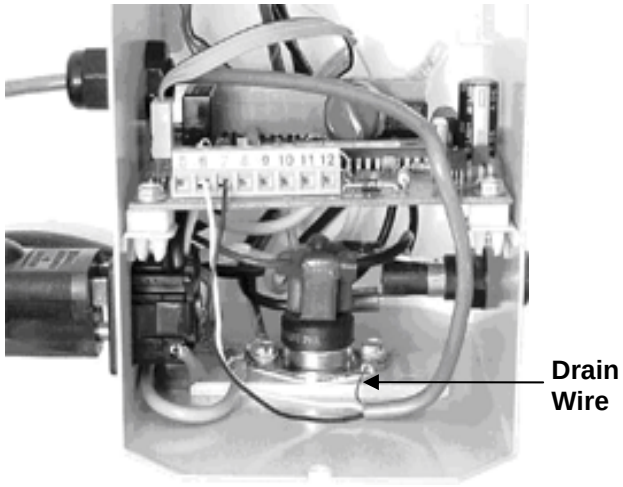

Example of a "drain" wire termination

2. Never run I/O signal wires in the same conduit or raceway as AC power lines such as wires to motors, solenoids, heaters, welders and Rodix controls, etc.

3. I/O wires within an enclosure should be routed as far away as possible from relays, solenoids, transformers, power wiring and other noisy equipment. Keep the I/O signal wires separate from the control's input and output power wiring. Secure the wires in place.

4. Whenever relays or solenoid valves are used, install a Snubber on them to reduce electrical noise. Use a diode on a DC coil. Use a RC Snubber on an AC coil.

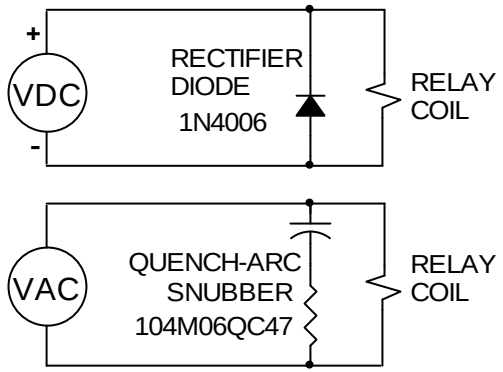

5. In extremely high EMI environments, Power Line Filters and ferrite beads can be effective. Install ferrite beads on I/O signal wires as close as possible to the circuit board terminal strip. Loop the wire through the bead several times or use several beads on each wire for additional protection.

RODIX, INC.
Toll Free (800) 562-1868
E-mail custserve@rodix.com
www.rodix.com

©2000,2014 RODIX INC. Good Wiring 1/31/2014