

IV3-L5C

AI imaging illumination unit for smart camera

Specifications

Model		IV3-L5C
Compatible sensor		IV3-500CA
Lights	Illumination	White LED
Power supply		Power is supplied by the connected sensor
Environmental resistance	Enclosure rating	IP67*1
	Ambient temperature	0 to 40°C 32 to 104°F (No freezing)
	Relative humidity	35 to 85%RH (No condensation)
Material		Case: Aluminum die-casting Front cover: Acrylic
Weight		Approx. 195 g 6.88 oz

*1 Applicable only when mounted to a compatible sensor. Except when the polarizing filter (OP-88644/OP-88645/OP-88646/OP-88647) is mounted.

Dimensions

* Download CAD file or product manual for larger image/text and more detail.

IV3-500CA/500MA/600CA/600MA/L5C/L5M/L6C/L6M
OP-88634

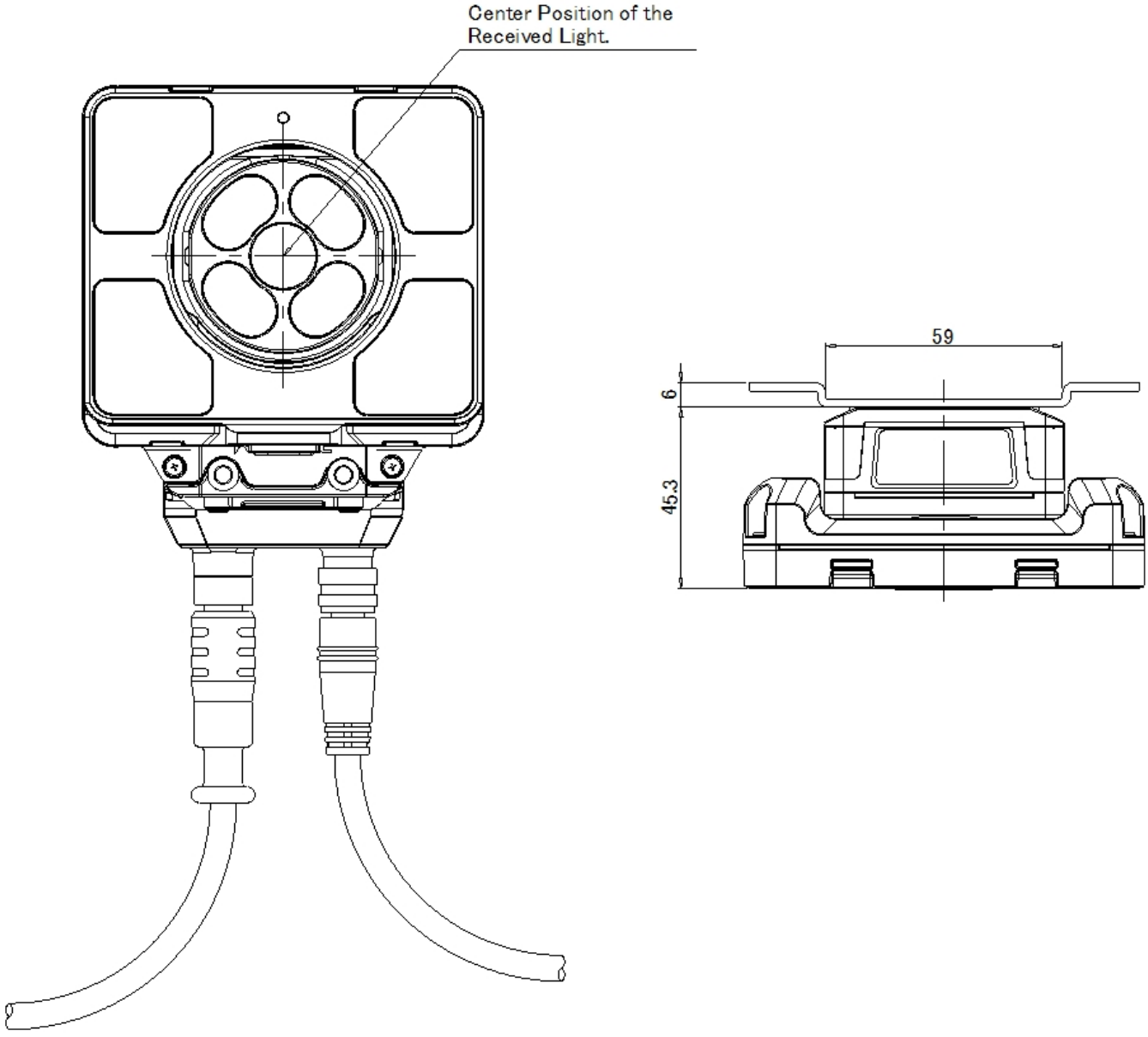

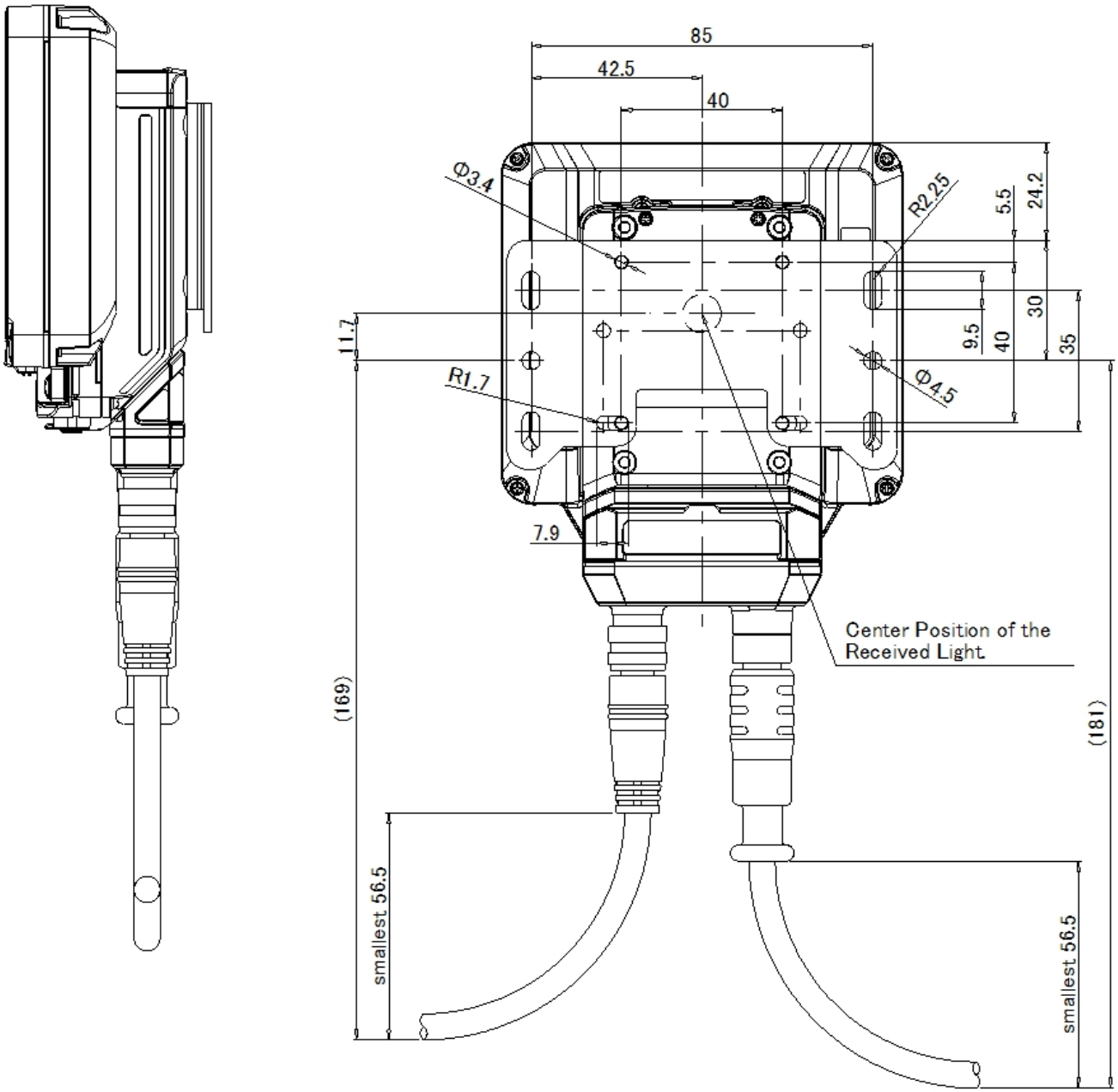
85
42.5
40
Φ3.4
R2.25
5.5
24.2
30
9.5
40
35
11.7
R1.7
Φ4.5
7.9
Center Position of the
Received Light
(169)
(181)
smallest 56.5
smallest 56.5

IV3-500CA/500MA/600CA/600MA/L5C/L5M/L6C/L6M
OP-88644/88645



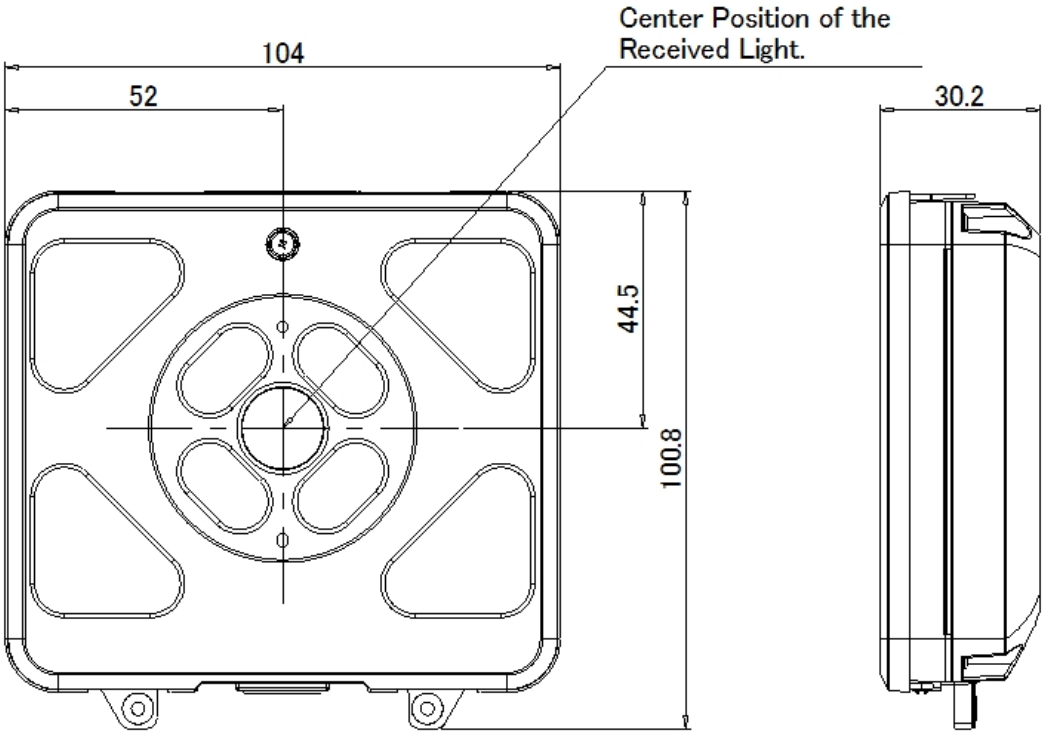

IV3-500CA/500MA/600CA/600MA/L5C/L5M/L6C/L6M

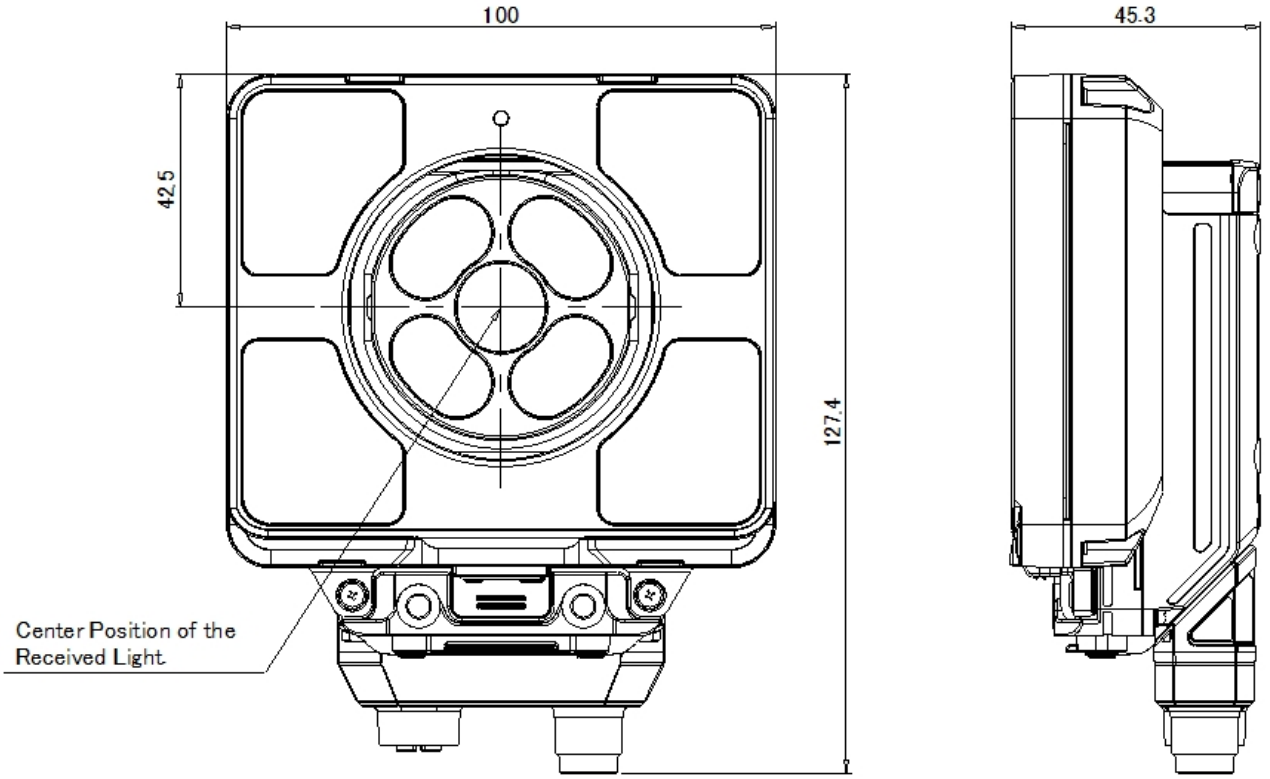

IV3-L5C/L5M/L6C/L6M

