RODIX INC.
FEEDER CUBE®
VF Series
GENERAL PURPOSE



Model VF-393
P/N 121-200-0769
Vibration sensor P/N 123-215

Listed, File No. E183233

Input Voltage: 85 - 264 VAC, 50/60 HZ.
Input Fuse Size: 5 AMPS each unit

Output Voltage: 0 -120/240 VAC
Output Frequency: 5-300Hz.

Rated Output Current
Units A & C: 3A at 120V or 1.5A at 240V
Unit B: 9A at 120V or 4.5A at 240V

© 2009, 2013 RODIX INC.

SET UP AND ADJUSTMENTS

Mounting

The VF-3 and VF-9 controls may be mounted vertically or horizontally, but the VF-3 and VF-9 controls stay cooler when mounted vertically. Mount the control to a metal plate or mount it so that the back of the heat sink is fully exposed to the air.

Electrical Connections

Make the electrical connections prior to turning the control on. Once connections are made to the feeder control, any desired changes to the software settings can be made with the cover closed. **Warning**: **Shock Hazard! Do not operate control with cover open.**

1. Part Sensor Input

(Photo-sensor or Proximity Switch)

Connect a three wire, current-sinking (NPN) or current-sourcing (PNP) sensor to TB2 as shown on the enclosed wiring diagram. The sensor must be able to operate on 12VDC and be capable of switching at least 3.0 mA. See Parts Sensor Settings section for more operation information.

2. Run Jumper Input

A Run Jumper comes installed from the factory as shown on the enclosed wiring diagram.

If the run jumper input is to be controlled by a relay contact, switch, or other device, replace the factory-installed jumper (see TB2 of the wiring diagram) with the contact device. The contact must be able to switch 12VDC at 3.0 mA. The control will then run only when the contact is closed and the part sensor is calling for parts. The right column of the display shows the run status with “R= 1” or “R= 0.”

If the run input will be controlled by a current sourcing PLC output, use the “Sig” and “-“ terminals (see TB2 on the wiring diagram).

For the High/Low parts sensing mode, a second parts sensor (PNP type only) connects to the run input in place of the run jumper.

3. Auxiliary Output

The right column of the display shows the status of the Aux output, “A=1” or “A=0.” The Feeder Bowl/Hopper Interlock “+” and “sig” (see TB2 on the wiring diagram) can be connected to a Rodix FC-40 All-Purpose Series control (TB2-11 & 12) when control of a bulk material hopper is needed. The control interlock will prevent the hopper from operating anytime the bowl is turned “OFF” or in "STAND BY" mode. The Interlock output is capable of switching 12 VDC at 85 mA. The Interlock output can also be used to drive a solid state relay that can operate auxiliary equipment such as air valves. See Figure 2 on the wiring diagram. One VF series control can be interlocked to another. The aux output of the master control connects to the run input of the subordinate.

A 1 Watt or 0.6 Watt 12VDC air solenoid or a relay can be driven by the Aux output. Note: a diode (1N4006) must be placed across the solenoid in the reverse polarity to adsorb the energy when the solenoid is de-energized. The “bar” side of the diode connects to TB2 “+” and the “solid colored” side connects to TB2 “SIG.” Failure to use a diode in reverse polarity voids the warranty.

4. Internal Power Supply

At the rated line voltage, the line isolated power supply is capable of providing a combined total current of 150 mA at 12 VDC. The total current includes the parts sensor, auxiliary output accessories, and CFR sensor.

5. Power Connections

The control can operate on a power line from 85 to 264VAC. The plug can be connected to a standard North American outlet. Cut the plug end(s) off for 208 and 240VAC and make proper plug-in connections for the factory’s power lines.

The variable frequency control is so efficient that it recaptures the energy from the feeder coils every time they turn off. Because of this the output power cord may be larger than the input cord. The VF-12 uses a #12 AWG output cord and the receptacle is not provided. The VF-18 uses a #10 AWG output cord and the receptacle is not provided.

6. External Speed Control Connections

The following methods of remote power level control can be utilized when desired:

A. CFR sensor can maintain a constant feed rate. Attach the CFR sensor to terminals ACCEL "-" (blue) and to ACCEL "+" (brown). (Then update the software settings. Sections 11-A and 13-B)

B. 4-20mA signal can be connected by bringing the positive signal wire to 4-20 "+" and ground to 4-20 "-". (Update software settings. Sect 11-B)

C. 0-10VDC Analog input signal can be connected by bringing the positive signal wire to 0-10V "+" and ground to 0-10 "-". (Update the software settings. Section 11-C)

Software Adjustments

Once the electrical connections have been made, the control can be turned on. The software settings can be adjusted as desired through the control menu.

Display Messages

The normal operating display shows the status of the control with regard to input signals and control settings. See the Control Menu Layout page for display message details.

Navigating The Control Menu

The control uses four programming keys to program the control. The "**I/0**" key controls run, stop, and over-ride.

A. The **ENTER** key allows entry to the menu and access to adjust each setting. Push and hold the enter key to enter the program mode. If the security feature has been enabled, enter the proper code. Once inside the menu, the enter key selects a menu item or a parameter to adjust. Any changes to the settings are saved at power-down.

B. The **BACK** key moves the current menu location up one level higher than it was before. It is also used to get back to the normal operating display.

C. The **Arrow Down** key allows the user to step down through the program menu or to decrease a setting.

D. The **Arrow Up** key allows the user to step up through the program menu or to increase a setting.

E. The "**1/0**" key allows the user to temporarily stop or to start the control's operation. When the LCD status reads "Stop/Run," hold the "1/0" key down for just over a second, and the control will start the over-ride operation. In over-ride mode the output turns on regardless of I/O connections and status.

See the "Control Menu Layout" chart for the menu structure. When in the menu mode and no keys are pressed for 1 minute, the display reverts to the normal operating display mode.

7. Amplitude Power Setting

The output power is controlled by the up and down arrow keys. The power setting can be adjusted with the keys unless the security feature lock has been selected. Once the proper security code has been entered, the power setting may be adjusted under the "Power" menu. Note: the power setting may not be above the maximum power setting or below the minimum power setting level. The amplitude power setting is displayed in the following manner: "A= 50.0%."

8. Limiting The Maximum Output Of Control

The "Max Amplitude" setting can be adjusted to keep a vibratory feeder from hammering or vibrating excessively when the control is turned up to full power. The maximum power setting can be found under the "Power" menu. It can be adjusted from 100.0% down to 40.0%.

Caution: it is recommended when using the CFR feature, that the Max output level of the control should be limited to prevent feeder coil from overheating. The amplitude could continue to increase if the system cannot get back to the desired vibration level.

9. Setting The Minimum Output of Control

The "Min Amplitude" setting can be adjusted to the desired low level of vibration. The minimum power setting can be found under the "Power" menu. It can be adjusted up from 0.0% to 95.0%. Note: the software does not allow the minimum level to be within 5.0 counts of the maximum level.

10. Setting The Soft-Start

The start-up of the control's output can be adjusted to ramp up to the desired output level instead of starting abruptly. Soft-start keeps parts from falling off the tooling, reduces spring shock, and can eliminate hammering when the control turns ON. The soft start setting can be found under "Power Settings" menu. The soft start can be set from 0.0 to 10.0 seconds. When using the 2 speed operation, the soft start function is active during the low to high speed transition.

11. External Speed & Frequency Control

The feeder control's power level can be controlled by an external signal from a PLC, CFR sensor, or an analog source. The "External Speed Connections" section gives connection details.

A. When the Constant Feed Rate (CFR) sensor is used, The "Amplitude Source" and "Frequency Mode" settings should be set to "Auto Track." The control should display "Run/CFR" showing that the sensor is connected. Set the power setting to the desired feed rate. The control uses information from the CFR sensor to maintain a constant vibration level at the resonate frequency. See the CFR instructions page for more information.

Caution: it is recommended when using the CFR feature, that the Max output level of the control should be limited to prevent the feeder coil from overheating. The amplitude could continue to increase if the system cannot get back to the desired vibration level.

B. 4-20mA signal from a PLC can be used to remotely vary the output of the control instead of the keypad. The "Amplitude Source" setting must be set to 4-20mA to enable it. After the 4-20mA feature is selected, the control will automatically turn ON whenever a 4-20mA signal is applied to the control (TB2 "+ 4-20" & "-"). When the 4-20mA signal has been removed, the amplitude setting resets to zero.

The 4-20mA menu selection allows a PLC to control both the output Frequency and Amplitude or only the Frequency or just the Amplitude. The amplitude is controlled by the 4-20mA input. The Frequency is controlled by the 0-10VDC signal. The signal adjusts a 100Hz range. The Min Frequency adjustment specifies the frequency used when the 0-10VDC input is at 0VDC. The Max Frequency adjustment can be used to ignore the upper end of the 0-10VDC signal.

C. 0-10VDC signal from a PLC can be used to remotely vary the output of the control instead of the keypad. The "Amplitude Source" setting must be set to 0-10VDC to enable it. After the 0-10VDC feature is selected, the control will automatically turn ON whenever a signal is applied to the control (TB2- "+0-10" & "-"). When the 0-10VDC signal has been removed, the amplitude setting resets to zero.

D. When it is desirable to ignore the external speed control inputs, the "Manual" setting can be selected.

12. CFR Positive and Negative Gain

The CFR Positive and Negative Gain settings control the rate the feeder's vibration level is corrected by the control. When the vibration decreases below the set-point, the "CFR Positive Gain" sets the rate at which the output gets boosted to compensate for a vibration decrease. When the vibration increases, the "CFR Negative Gain" sets the rate at which the output gets lowered to compensate for a vibration increase. If either the CFR Positive or Negative gain is set too low, it will take longer than desired to get back to the original feed rate. If either gain is set too high, the control may over-shoot beyond the original feed rate. The CFR Positive and Negative Gain settings effect the control's operation when the CFR sensor is used, and the "Amplitude Control" is set to "Auto Track."

13. Frequency Settings

The "Frequency" menu contains the portion of the menu that controls the frequency settings. The frequency can be adjusted from 5 to 300Hz. The spring/mass ratio of the vibratory bowl determines the natural vibrating (resonate) frequency of the bowl. The control's output frequency needs to be adjusted to match the natural frequency of the bowl. The control can be manually tuned or automatically tuned. The frequency setting is displayed as "F= 120.0Hz."

The "Frequency Mode" setting selects either manual frequency adjustment or auto tracking frequency adjustment.

A. Manually finding the resonate frequency of the bowl is much like finding a station on the AM radio band. Set the amplitude to about 30%. Then adjust the frequency across its range. The bowl should be expected to vibrate the parts at more than one spot across the frequency range. The resonate frequency is the frequency with the most vibration. Once the best feeding frequency range has been found, fine tune the frequency for the best parts movement. To increase feeder stability for parts load fluctuations, adjust the frequency down by .2 or .3Hz so that the feeder becomes slightly over-tuned.

B. "Auto Scan" scans to locate the bowl's resonate frequency. Once auto tracking has found the resonate frequency, it can maintain the resonate frequency and amplitude of the feeder as the parts load changes. The CFR sensor is needed in order for auto tracking to operate, and "Auto Tracking" needs to be turned on under both "Amplitude Source" and "Frequency Mode" menus.
To show when frequency "Auto Tracking is enabled, the normal display menu will show a bold "**F**." When"**=**" is shown in bold, the control is locked onto the resonate frequency of the feeder.

The Minimum frequency limit can protect the feeder from feeding at a low frequency if a spring or weld breaks. The Min. or Max. frequency can block out undesirable frequencies during Auto Scan. To avoid coil damage and blown fuses during an Autotune scan, the Minimum frequency should only be adjusted below the 45Hz default when the vibratory feeder has been specifically designed for operation below 45Hz.

14. Resonate Threshold Level

The "Resonate Threshold Level" setting sets the minimum level of vibration that the control considers as a resonate condition during an Autoscan. The setting should be reduced if an "Auto Scan" cannot find the resonance frequency after two scan attempts. Adjustment is not normally needed.

15. Auto Track Dead Band

The "Auto Track Dead Band" setting controls how far the resonant frequency of the vibratory feeder can deviate before the output frequency of the control is adjusted to follow it. Decreasing the setting narrows the range, and increasing the setting makes the dead band range larger before a reaction takes place. This setting normally doesn't need to be changed.

16. Setting The Time Delays

The ON and OFF parts-sensor time-delays are set independently for a period of 0-20 seconds. The time delay settings can be adjusted to provide the best individual response for the feeder. The time delays can be found under the timer settings menu. The flashing "=" blinks every quarter second to show when either the ON and Off delay timer is running.

17. Parts Sensor Settings

The "I/O Interface" menu contains the portion of the menu that controls the parts sensor type and polarity.

A. The control comes preset to AUTO to work with either an NPN or PNP sensor. If the sensor input status "S=1 or 0" indicates the input is on all of the time, set the control to either NPN or PNP to match the type of sensor being used.

B. The control comes preset to "inverted" sensor polarity. Set the sensor polarity to either "Normal" (through beam) or "Inverted" (proximity or retro-reflective).

18. Run Mode Settings

The "I/O Interface" menu contains the portion of the menu that controls the run mode and empty bowl logic.

A. The control comes preset for normal on/off parts sensor operation. The following can be chosen:
1) The "Constant On" feature can be used to keep the bowl running while the Aux output switches power to a device (air valve, SSR, or relay).
2) The "2-Speed" feature allows the bowl to keep some vibration going to either trickle parts for weigh counting or to cut down the time to full speed when a high feed rate is needed. The parts sensor switches between high and low speed settings. Low speed is set by "Min Amplitude."
3) The "high/low" function maintains the parts level between two parts sensors on the track. The second sensor (PNP) gets installed in place of the run jumper.

B. The control comes preset with the "empty bowl timer" (or parts jam timer) disabled. Once enabled, the bowl will stop feeding when parts have not passed the sensor for the set time. The empty bowl timer can be adjusted from 5 to 255 seconds under the "timer settings" menu. Press the "1/0" key or toggle the parts sensor to restart the control. The auxiliary output can be set up to turn on a signaling device. See the section that describes the auxiliary output for more details.

19. Auxiliary Output Settings

The "Aux Output Mode" menu contains the menu that controls the auxiliary output (Aux Out) operation.

A. The factory-default "Normal" setting allows the auxiliary output to turn on and off with the output of the feeder.

B. The auxiliary output can be set to have its signal inverted from the output of the feeder. Set the "Aux Out" parameter to "Invert" to activate it.

C. The auxiliary output can be set so that the alarm signal can indicate when the "Empty Bowl" timer has timed out. Set the "Aux Out" parameter to "Alarm" to activate it.

D. The auxiliary output can be set so that the alarm signal can be inverted when the "Empty Bowl" timer has timed out. Set the "Aux Out" parameter to "Inv Al" to activate it.

E. The auxiliary output can be set so that an air solenoid can be activated 1 second before feeding begins and continue for 4 seconds after feeding ends. This feature is helpful for parts orientation. Set the "Aux Out" parameter to "Air Jet" to activate this feature.

20. Diagnostics

A. The first menu item under the diagnostic menu shows the software revision level.

B. The next four items under the software revision level show certain software registers that may be helpful to Rodix staff while troubleshooting over the phone.

21. Security Settings

The "Security" menu contains the portion of the menu that controls access to the program menu settings. When enabled, the security code is a number from 000 to 999. The preset code is 123. It may be changed.

A. The control comes with the security setting "Unlocked" so the control can be set up. The amplitude can be adjusted from the normal operating display. Press and hold "Enter" to enter the program menu and adjust the software settings.

B. The amplitude only (Ampl. Only) adjustment allows operators to adjust the amplitude through the normal operating display, but not get to the program menu settings without the security code.

C. The "Lock" setting locks the control from any adjustment without the use of the security code. If the security code has been forgotten, enter the security code #010, **press and hold** "Enter" until entry has been granted. Note: ignore the "Wrong Security Code" message. Once in the programming menu be sure to set the security code.

22. Default Memory

Occasionally it is nice to get back to a known setting. Once a feed system has been set up properly, the setting should be manually saved into the "Save Settings1" memory. If an operator disturbs the settings, the "Restore Settings1" feature can restore the control to a known good set up. When different parts are used on the same feed system, two other memory locations called "Save Setting2" and "Save Settings3" can be used for other parts. Operators can recall settings 1, 2 or 3 based on the part being used. The "Factory Reset" selection will put the original factory settings into the memory.

23. Language

The run display and programming menus can be set to display in English, Spanish (Español), French (Français), or German (Deutsch).

24. Over Current Protection

The control has a coarse over-current fault protection that trips when the output is above the rated current. The VF-3 is rated 3A at 120V and 1.5A at 240V. The VF-9 is rated 9A at 120V and 4.5A at 240V. The VF-12 is rated 12A at 120V and 6A at 240V. The VF-18 is rated 18A at 120V and 9A at 240V. The operator should monitor the output current to ensure that it is within the desired range. If an "Over Current" occurs, press the "1/0" key to restart the control. The operator should also monitor the temperature of the coils on the vibratory feeder. The coils should never be too hot to hold.

25. CFR Set Point

The CFR set point sets the amplitude vibration level that the control regulates to. The VF Series control adjusts the amplitude automatically to match the CFR set point. The CFR set point can be adjusted by the depression of the "UP" and "DOWN" arrows keys. Holding an arrow key down will adjust the amplitude setting instead of the CFR set point. The CFR set point can also be controlled by a 4-20mA signal (when using Version 1.26 software and greater).

The CFR set point only appears on the display when the "Amplitude Source" menu under power settings is set to "Auto Track" and the CFR sensor is attached.

26. Fault Messages

The VFcontrol has error and warning messages that relate to "Over-Amps", "Over-Temp" and Bowl out of parts timers. To clear the message or fault, press the "1/0" button twice.

WARNING:

Fuses should be replaced with Littelfuse 3AB "Fast Acting" type or equivalent of manufacturer's original value.

Mounting this control on a vibrating surface will void the warranty.

Warranty

Rodix Control Products are Warranted to be free from defects in material and workmanship under normal use for a period of two years from date of shipment. For the full description of the warranty, terms, and software license, please contact the factory.

For assistance installing or operating your Rodix Feeder Cube® please call the factory or visit our web site. Technical help is available to answer your questions and emal any needed information. To return a control for IN or OUT of warranty service, please ship it prepaid to:

Rodix Inc., ATTN: Repair Department

If under warranty, Rodix will repair or replace your control at no charge; If out of warranty, we will repair it and you will be billed for the repair charges (Time and Material) plus the return freight. Quotes for repairs are available upon request. A brief note describing the symptoms helps our technicians address the issue.

Feeder Cube® is a registered TM of Rodix Inc.
Banner® is a registered Trademark of Banner Engineering Corp, 9714 10th Ave, Minneapolis, MN 55441

RODIX, INC.
2316 23rd Avenue,
Rockford, IL 61104
Toll Free (800) 562-1868
E-mail custserve@rodix.com
www.rodix.com

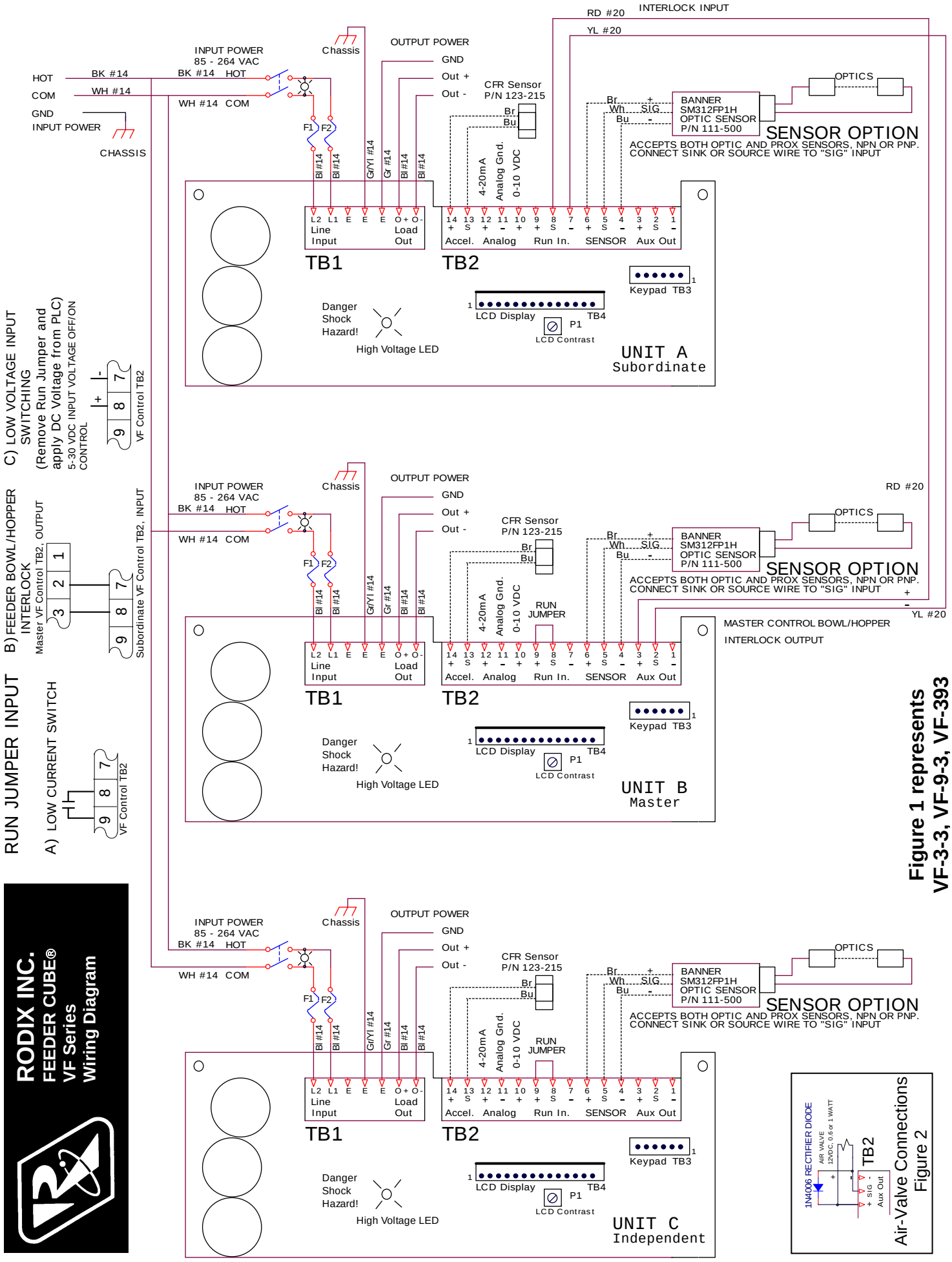

Figure 1 represents VF-3-3, VF-9-3, VF-393

RODIX INCORPORATED

2316 23rd Ave., ROCKFORD IL 61104
TOLL FREE (800) 562-1868, FAX (815) 316-4701
E-mail custserve@rodix.com
www.rodix.com

FEEDER CUBE®
VF-393
Variable Frequency Control

GENERAL PURPOSE MODEL
IMPORTANT: APPLICATION NOTE

VF-393 Dimensions

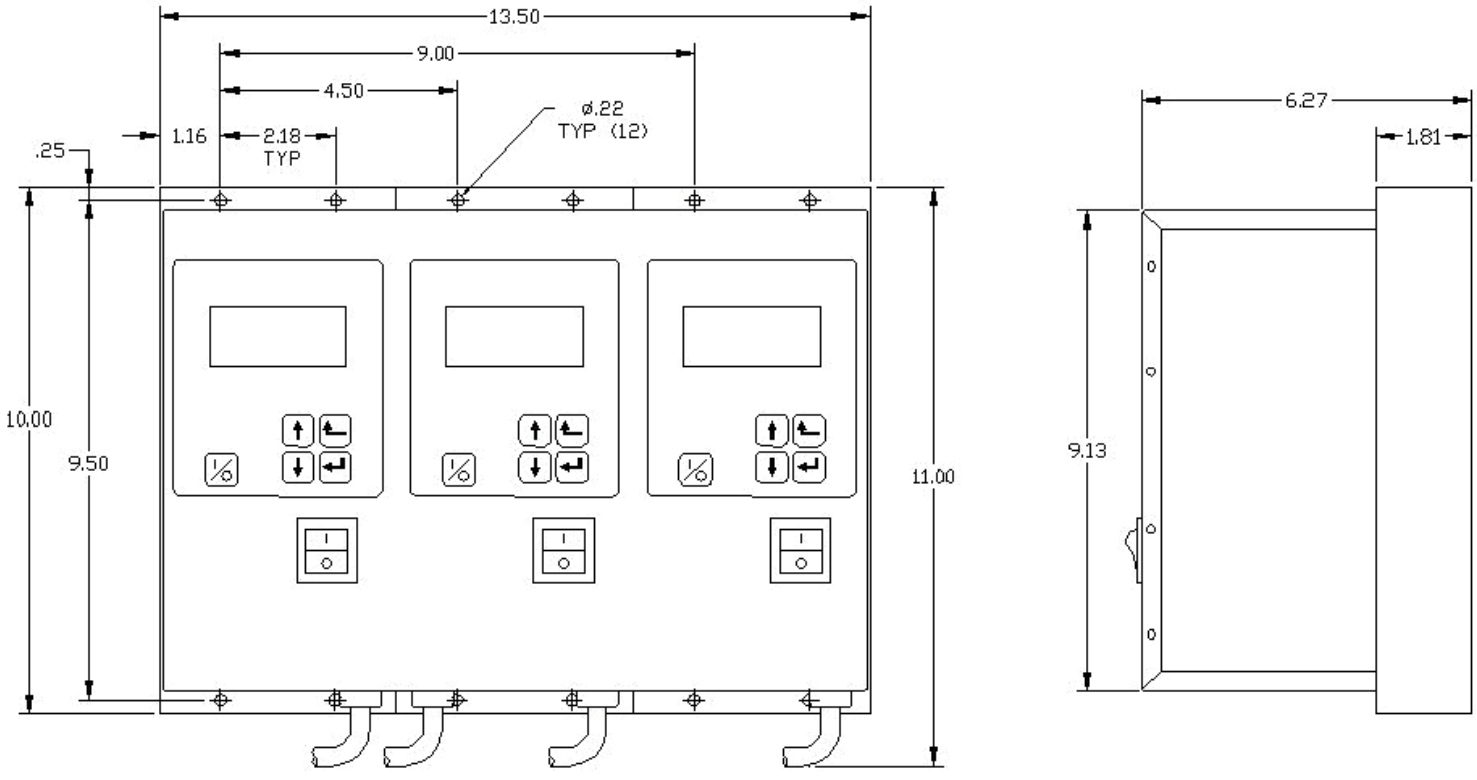

Steps to Interlock Two VF Series Controls together

If a PLC is interfaced to both controls, optical isolation is necessary, see step 4 below.

1. Remove the run jumper from TB2 terminals 8 & 9 of the subordinate control.
2. Add a wire from terminal 3 of the master control to terminal 8 of the subordinate control.
3. Add a wire from terminal 2 of the master control to terminal 7 of the subordinate control.
4. If optical isolation between the controls is desirable, remove R21 from the subordinate control.

VF Series Master Control

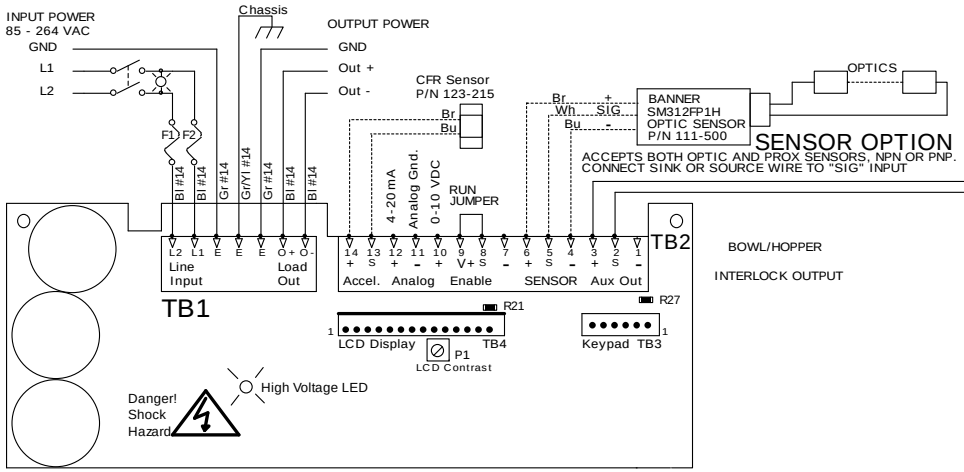

VF Series Subordinate Control

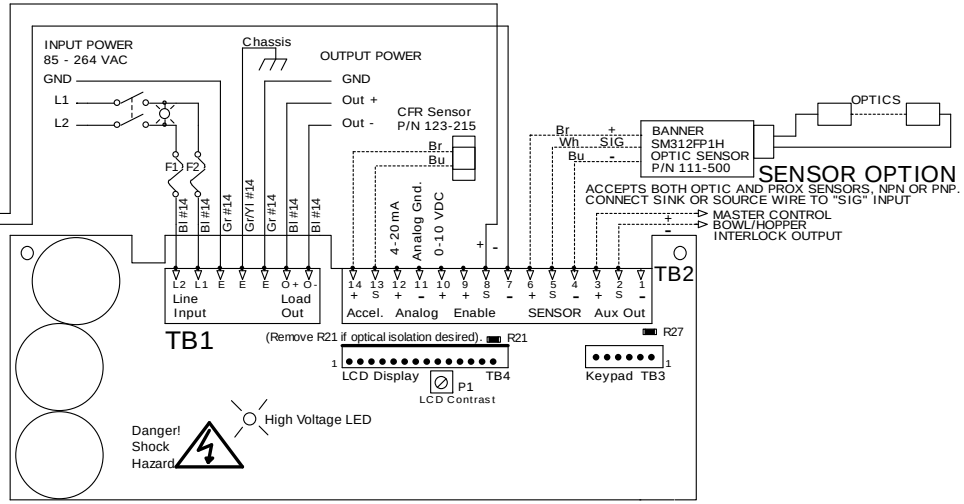

Steps to Interlock an FC-40 Plus Series to a VF Series Control

1. Add a wire from terminal 2 of the VF master control to TB2-11 of the subordinate control.
2. Add a wire from terminal 3 of the VF master control to TB2-12 of the subordinate control.
3. Move the run jumper on the subordinate control from TB2-6 & TB2-7 to TB2-5 & TB2-6.

VF Series Master Control

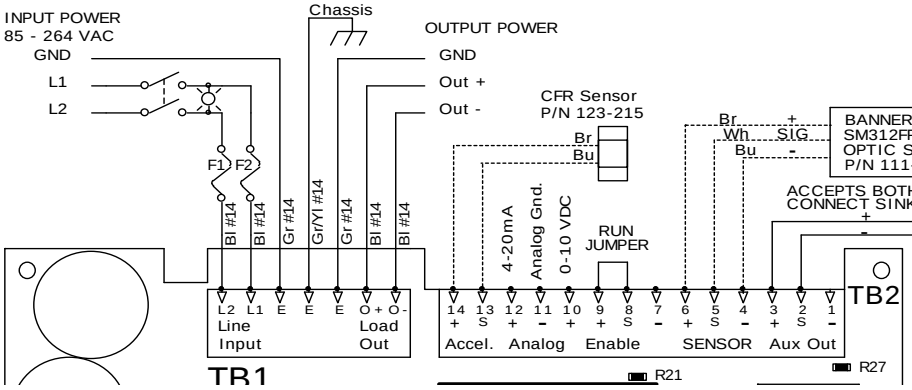

FC-40 Plus Subordinate Control

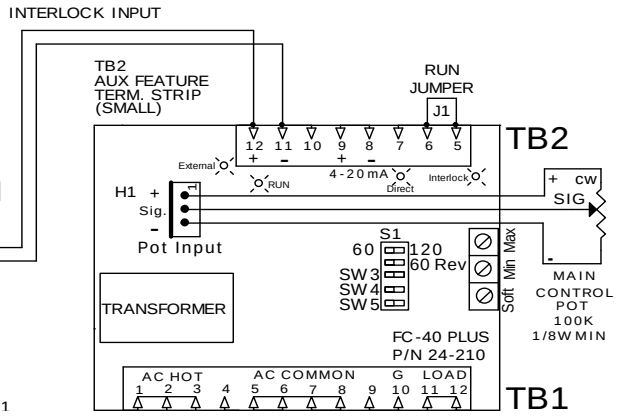

Control Menu Layout for VF-3, VF-9

Normal Operation Display

Press and hold 'Enter' to enter the program menu or get to the security menu.
Use the arrow up and down keys to adjust the security number. Press enter to test the security number.

Main Menu

Main Menu	Sub Menu	Adjustments
Power Settings	Amplitude	[**0.0** to 100.0] %
	Max Amplitude	[**100.0** to 40.0] %
	Min Amplitude	[**0.0** to 95.0] %
	Soft Start Time	[0.0 to 10.0] Seconds (**0.5** Default)
	Amplitude Source	[**Auto Tracking** Manual, 0-10V, 4-20mA,]
	CFR Positive Gain	[**25** Default]
	CFR Negative Gain	[**5** Default]
Frequency Settings	Frequency	[5.0 to 300.0] Hz (**60.0** Hertz Default)
	Max Frequency	[15.0 to 300.0] Hz (**140.0** Hertz Default)
	Min Frequency	[5.0 to 290.0] Hz (**45.0** Hertz Default)
	Frequency Mode	[**Auto Tracking,** Manual]
	Auto Scan	[Press ENTER to perform an automatic frequency scan]
	Resonate Threshold Level	[**200** Default]
	Auto Track Dead Band	[**64** Default]
Timer Settings	On Delay	[0.0 to 20.0] Seconds (**0.5** Default)
	Off Delay	[0.0 to 20.0] Seconds (**0.5** Default)
	Empty Bowl Timer	[5 to 255] Seconds (**10** Default)
I/O Interface	Sensor Polarity	[**Inverted**, Normal]
	Sensor Type	[**Auto**, NPN, PNP]
	Run Mode	[**Normal**, Always On, 2-Speed, High/Low]
	Empty Bowl	[**Normal**, Stop]
	Aux Output Mode	[**Normal**, Inverted, Alarm, Inv Alarm, Air Jet]
Diagnostics	Software Version	[Software Revision Level]
	Accelerometer	[data]
	Over Amps	[data, data]
	DC Volts	[data]
	Internal Temperature	[data] °C
Security	Keypad Lock	[**Unlocked**, Amplitude Only, Locked]
	Security Code	[000 to 999]
Defaults	Restore Settings 1	['Enter' Restores User Settings 1]
	Restore Settings 2	['Enter' Restores User Settings 2]
	Restore Settings 3	['Enter' Restores User Settings 3]
	Save Settings 1	['Enter' Saves User Settings 1]
	Save Settings 2	['Enter' Saves User Settings 2]
	Save Settings 3	['Enter' Saves User Settings 3]
	Factory Reset	['Enter' Resets Control to Factory Default Settings (Shown in **bold**)]
Language	Pick Language	[English, Español (Spanish), Français (French), Deutsch (German)]

Normal Display Message Priority

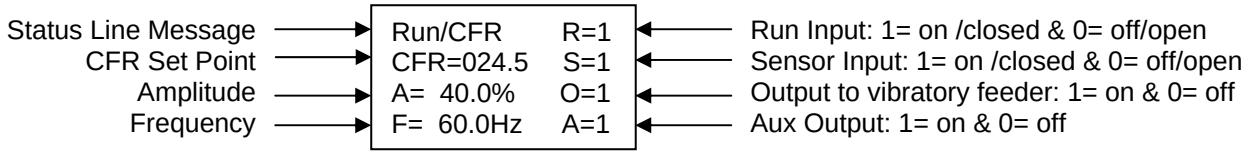

The normal operating display shows the status of the control with regard to input signals and control settings. They are listed from highest to lowest in priority. The highest priority message takes precedence over all other messages.

Stop/Run - The 1/0 button has been pushed to disable control operation.
Override - The 1/0 button has been pushed and held so the control will feed without interruption from the "Sensor" or "Run" inputs.
Run Input - The run jumper has not been not made.
Parts Sens - The parts sensor logic is telling the control to stay off.
Empty/jam - Empty bowl timer has timed out because parts did not pass by the parts sensor to reset the timer. Press 1/0
Analog - An external signal is in control of the speed input.
Low - Low Speed used when 2 speed has been selected and the sensor is not made.
Zero Speed - The output is off because the output is set to 0.0%.
Run – The feeder is running normally.
Run/CFR – Constant Feed Rate sensor is regulating the feed rate (Autotune®).

RODIX INC.
FEEDER CUBE®
VF SERIES CFR SENSOR
CONSTANT FEED RATE
® P/N 123-215

1. INSTALLING THE CFR SENSOR

Note: Failure to adequately prepare the feeder's surface properly may result in a Constant Feed Rate (CFR) sensor that will not bond to the feeder. The sensor should not be mounted until step C-6.

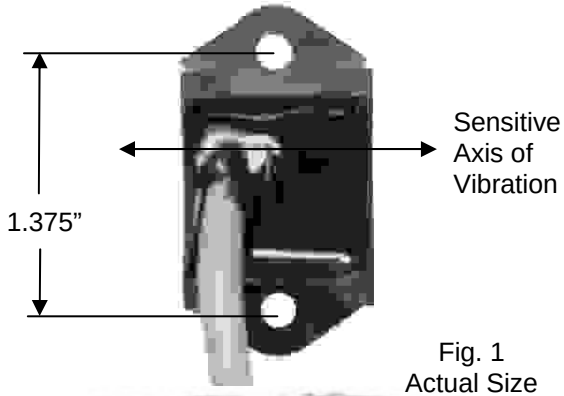

Fig. 1
Actual Size

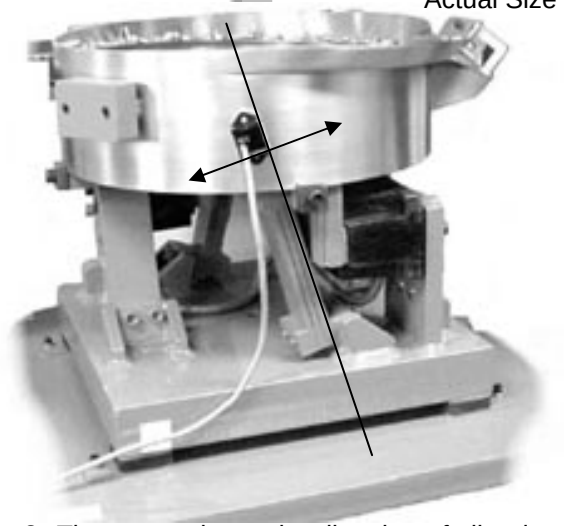

Fig. 2 The arrow shows the direction of vibration which is at a right angle to the spring pack.

A. ORIENT THE SENSOR so that its sensitive axis is in the same direction as the vibration of the feeder. The double-ended arrow in figure 1 shows the sensor's sensitive axis. Align the sensitive axis of the sensor in the same direction as the vibration (see figure 2). The sensor must be oriented correctly for proper operation.

B. CHOOSE A LOCATION for mounting the sensor on the feeder that is smooth and that will allow the adhesive on the sensor to bond. Avoid mounting the sensor over ridges and bumps which can reduce the ability of the adhesive to stick to the feeder. The correct location will also have enough space for the sensor's cable to hang straight down without touching anything else.

C. SURFACE PREPARATION of the feeder is crucial for proper bonding between the sensor and the feeder. Please follow these steps completely.

1) The feeder should be kept between 70° and 100° F for ideal tape application.
2) Clean a three and one-half inch circular area with a solvent like isopropyl alcohol that will not leave a residue. As a rule of thumb, the area can be considered clean when after cleaning the area with a solvent-saturated, white paper-towel, the towel is as clean as it was before wiping.
3) Using a good amount of pressure, polish the cleaned, circular area of the feeder using a scratch pad or steel wool. Repeat step 2, and then go to step 4.
4) Wipe the cleaned surface with an alcohol wipe or with a 50/50 isopropyl alcohol/water combination.
5) Dry the surface thoroughly using a low lint cloth or a clean paper towel.
6) Remove the vibration sensor from its protective packaging. Remove the liner from the adhesive backing. Avoid touching the tape. Align the sensor as shown in figures 1 and 2. Apply the vibration sensor to the prepared area of the feeder. Press the sensor very firmly onto the feeder surface for at least 10 seconds.
7) Allow the vibration sensor at least 20 minutes to cure before operation. Note: It takes 72 hours for the adhesive to fully cure at 70° F.

Alternatively, #8 or M4 screws can be used to mount the sensor to the feeder. The mounting holes are 1.375" apart.

D. ROUTE THE SENSOR CABLE to protect it from strain due to vibration. The cable that attaches to the sensor will not break from normal vibration; however, some care should be used when routing the sensor cable from the sensor to the control. The cable should hang straight down from the sensor without touching the feeder bowl or anything else. Then, the sensor cable should curve towards the power control with a bend radius larger than 3 inches.

Use a cable tie and an adhesive-backed mount to attach the sensor cable to the side of the drive base. See Figure 2. Clean the mounting area before applying the adhesive-backed mount.

E. CONNECT THE SENSOR to the control. If needed, connect the sensor cable's brown wire to "+ACCEL" on TB2. The blue wire connects to the "–ACCEL" on TB2.

F. SELECT THE SENSOR in the software settings of the control menu. See the Control Menu Layout page for a visual layout of the program menu.

1) Press and hold the "Enter" key to enter the main menu.
2) With "Power Settings" displayed, press the "Enter" key to get into the submenu.
3) Arrow "Down" to select the "Amplitude Source" submenu.
4) Press the "Enter" key, and Arrow "UP" to select "Auto Tracking" from the adjustments.
5) Press the "Back" key twice to get back to the main menu.
6) Next, arrow "Down" to the "Frequency Settings" selection.
7) Press the "Enter" key to get into the submenu.
8) Arrow "Down" to select the "Frequency Mode" submenu.
9) Press the "Enter" key, and Arrow "UP" to select "Auto Tracking" from the adjustments.
10) Press the "Back" key three times to get back to the normal running display.

G. PERFORM AUTO SCAN of the vibratory feeder. See the Control Menu Layout page for a visual layout of the program menu.

1) Press and hold the "Enter" key to enter the main menu.
2) Arrow "Down" to select the "Frequency" submenu.
3) Press the "Enter" key, and Arrow "UP" three times to select "Auto Scan" from the adjustments.
4) Press the "Enter" key to perform an automatic frequency scan.

© 2005 RODIX INC.

RODIX, INC.
2316 23rd Ave., Rockford, IL 61104
Toll Free (800) 562-1868, FAX (815) 316-4701
E-mail custserve@rodix.com
www.rodix.com

RODIX INC.
FEEDER CUBE®
RODIX SOLUTION
.408

RODIX SOLUTION

Good wiring practices for avoiding electrical noise problems.

Rodix controls have been designed with a high degree of immunity to electrical noise; however, depending on the control installation, electrical noise can cause problems. These problems occur in less than 1% of the product installations. Most electrical noise problems can be avoided by following some simple guidelines. Good wiring practices need to be used to prevent electrical noise from interfering with your control's operation. Another name for electrical noise is Electro-Magnetic Interference (EMI).

Symptoms of Electrical Noise

The symptoms of electrical noise would appear as follows: a brief pause or a brief "bump" in the vibratory feeder's output that the control automatically recovers from. In rare cases the control will either stop operating or run continuously at full power in 120 pulse mode until the power switch is slowly cycled OFF and ON.

Sources of Electrical Noise

Electrical noise is generated by devices like relay coils, solenoid valves, contactors, servo motors, and variable frequency inverter drives. The electrical noise is then transferred to another device by one of three ways. The noise could be conducted through the power wires, or capacitively coupled from wire to adjacent wire, or it is transmitted from the wires of a noise source.

Solutions for Electrical Noise

1. Use shielded wires for all I/O (Input / Output) signals. The I/O signals may include: 4-20mA input, Run input, Sensor input, 0-5VDC input, Interlock input or AUX output. The shield "drain" wire should be tied to the chassis in the Rodix control. The drain wire should be kept shorter than 2". Please see the enclosed picture.

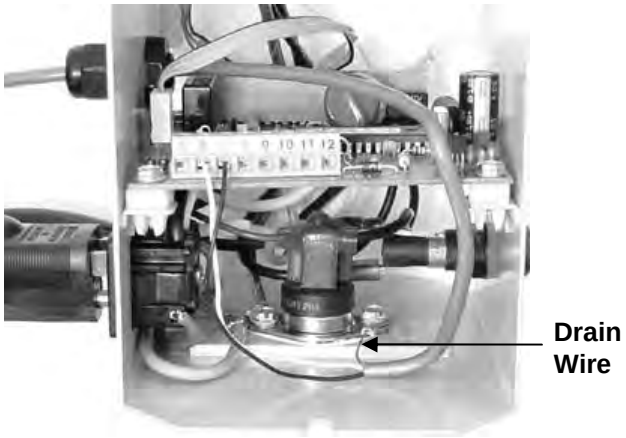

Example of a "drain" wire termination

2. Never run I/O signal wires in the same conduit or raceway as AC power lines such as wires to motors, solenoids, heaters, welders and Rodix controls, etc.

3. I/O wires within an enclosure should be routed as far away as possible from relays, solenoids, transformers, power wiring and other noisy equipment. Keep the I/O signal wires separate from the control's input and output power wiring. Secure the wires in place.

4. Whenever relays or solenoid valves are used, install a Snubber on them to reduce electrical noise. Use a diode on a DC coil. Use a RC Snubber on an AC coil.

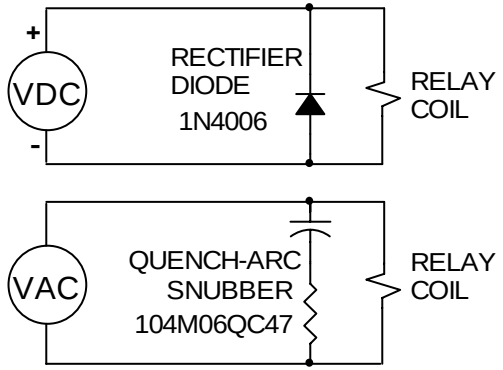

5. In extremely high EMI environments, Power Line Filters and ferrite beads can be effective. Install ferrite beads on I/O signal wires as close as possible to the circuit board terminal strip. Loop the wire through the bead several times or use several beads on each wire for additional protection.

RODIX, INC.
2316 23rd Avenue, Rockford, IL 61104
Toll Free (800) 562-1868, FAX (815) 316-4701
E-mail custserve@rodix.com
www.rodix.com

© 2000, 2010 RODIX INC. Solution 408 1/27/2010