

# IV3-500CA

Smart camera Standard model Color AF type

## Specifications

| | | |
|---|---|---|
| Model | | IV3-500CA |
| Type | | Standard type |
| Installed distance | | 50 to 2000 mm 1.97" to 78.74" |
| Tools | Available modes | Standard mode / Sorting mode |
| | Tool with standard mode | Learning, Outline, Color area*1, Area*2, Edge pixels, Color average*1, Brightness average*2, Width, Diameter, Edge presence, Pitch,<br>OCR, Color prohibit*3, Brightness prohibit, Position adjustment, High-speed position adjustment (1-axis edge/2-axis edge), Blob count |
| | Number of tools | Total: 65 tools*4 |
| Field of view | | Installed distance 50 mm 1.97" : 22 (H) × 16 (V) mm 0.87" (H) × 0.63" (V) to<br>Installed distance 2000 mm 78.74" : 789 (H) × 592 (V) mm 31.06" (H) × 23.31" (V) |
| Switch settings (programs) | | 128 programs (when using SD card) / 32 programs (when not using SD card) |
| Image receiving element | Type | 1/2.9 inch<br>color CMOS |
| | Number of pixels | 1280 (H) × 960 (V) |
| Image history | Number of storable images | 100 images*5 |
| | Save conditions | Selectable between NG only, NG and OK near threshold*6, and All*5 |
| Focus adjustment | | Auto*3 |
| Image data transfer | Transfer destination | Selectable between SD card, FTP server and SFTP server |
| | Transfer format | Selectable between bmp, jpeg, iv3p, and txt, and file names can be modified |
| | Transfer conditions | Selectable between NG only, NG and OK near threshold*7, and All |
| Exposure time | | 12 µs to 10 ms |
| Analysis information | RUN display | Tools list (Judgment results, degree of similarity, or degree of similarity bar display)*7 |
| | RUN information | Switchable between OFF, histogram, processing time, count, and output monitor<br>Histogram: Histogram, degree of similarity (Max., Min., Ave.), Number of OKs, Number of NGs<br>Processing time: Processing time (latest, Max., Min., Ave.)<br>Count: Trigger numbers, Number of OKs, Number of NGs, Trigger errors, Strobe errors<br>Output monitor: ON/OFF status by output<br>*7 |
| Lights | Illumination | White LED |
| | Lighting method | Pulse lighting/ continuously lighting is switchable. |
| Other functions | Image capture function | Digital zoom (2×, 4×), HDR, High gain, Color filter*1, White balance*1, Brightness correction, AI capture |
| | Tool functions | Additional learning, Mask outline, Masking function, Color extraction/exclusion*1, Color histogram function*1, Mono chrome histogram function*2, Scaling function |
| | Utilities | Failing sensor list, Failure hold, Test run, I/O monitor, Security settings (Two-factor password), Simulator*8, Addition al FTP/SFTP Image Information,<br>Multi-position adjustment, Multi-master image registration, High-speed program switching, Auto program switching |
| Indicators | | OUT, TRIG, STATUS, LINK/ACT, SD |
| Input | Type | Switchable between non-voltage input and voltage input<br>For no-voltage input: ON voltage 2 V or lower, OFF current 0.1 mA or lower, ON current 2 mA (short circuit)<br>For voltage input: Maximum input rating 26.4 V, ON voltage 18 V or higher, OFF current 0.15 mA or lower, ON curr ent 2 mA (for 24 V) |
| | Number of inputs | 6 ports, 3 ports are selectable as IN/OUT |
| | Function | IN1: External trigger,<br>IN2, IN3, I/O1 to I/O3: Enable by assigning optional functions<br>Assignable functions: Program switching, Clear error, External master image registration, SD card save cancel |
| Output | Type | Photo MOS relay output, N.O./N.C. Switchable<br>Maximum rating 26.4 V 50 mA, residual voltage 1.5 V or less*9 |
| | Number of outputs | 6 ports, 3 ports are selectable as IN/OUT |
| | Function | Enable by assigning the optional functions<br>Assignable functions: Total judgment (OK/NG), Run, Busy, Position adjustment result, Judgment result of each tool, Result of the logical operation of each tool,<br>Error, SD card error, Variety discrimination result |
| Power/I/O | Connector | M12 12 pin A code Male connector |
| | PoE | PoE power Class 3/4/6*10 |
| Ethernet | Standard | 1000BASE-T/100BASE-TX |
| | Connector | M12 8 pin X code Female connector |
| Network function | | FTP client, SFTP client |
| Interface compatibility | Built-in Ethernet | EtherNet/IP™, TCP/IP non-procedure communication |
| Expanded memory | | microSD card (microSD/microSDHC)*11 |
| Ratings | Power voltage | 24 VDC ±10% (including ripple) |

| | | |
|---|---|---|
| | Current consumption | 3.3 A or less (without the AI Lighting unit, and including the output load)<br>1.8 A or less (AI Lighting unit, and including the output load)*12 |
| Environmental resistance | Enclosure rating | IP67*13 |
| | Ambient temperature | 0 to +40°C 32 to 104°F (No freezing) |
| | Relative humidity | 35 to 85% RH (No condensation) |
| | Vibration resistance | 10 to 55 Hz; double amplitude 1.5 mm 0.06"; 2 hours in each of the X, Y, and Z directions*14 |
| | Shock resistance | 500 m/s$^2$, 1640'/s$^2$ 6 times in each of the 3 directions*14 |
| Material | | Main unit case: Aluminum die-casting<br>Indicator light cover: TPU<br>Ethernet connector: Copper alloy + Ni plating<br>Front cover: Acrylic (hard coating)<br>Power connector: PA/POM<br>Nameplate: PC<br>Water proof cap for the Power connector: PC+ABS alloy<br>Water proof cap for the Ethernet connector: PC |
| Weight | | Approx. 300 g 10.59 oz (without the AI Lighting unit)<br>Approx. 495 g 17.47 oz (with the AI Lighting unit) |

*1 Color type only.
*2 Monochrome type only.
*3 The focusing position can be automatically adjusted at the time of installation. Disabled during operation. The focusing position can be registered by programs.
*4 Tools can be installed by programs. This is the number of detection tools and position adjustment tools. Up to 64 detection tools can be set. The number of detection tools in Sorting mode are eight tools.
*5 Saves to the sensor's internal memory. The images saved to the sensor can be backed up to a USB memory stick inserted into the control panel (IV3-CP50) or to the PC where the software for the IV3 Series (IV3-H1) is being used.
*6 Learning tool only.
*7 Can also be displayed on the control panel (IV3-CP50) or the software for the IV3 Series (IV3-H1).
*8 Usable on the software for the IV3 Series (IV3-H1).
*9 Make sure to keep a total of each output with 120 mA or less.
*10 For a PoE power supply device, IEEE802.3at power class 4 or higher is recommended when using the AI Lighting unit, and IEEE802.3bt power class 6 or higher is recommended when the AI Lighting unit is not used. When using a device with less than the recommended power class, operation may be restricted due to power limitation.
*11 Use only products recommended by KEYENCE.
*12 The peak current is designed to be smaller if the AI Lighting unit is mounted. The peak current is greater if the AI Lighting unit is not mounted
*13 Except when the polarizing filter (OP-88640/OP-88641/OP-88644/OP-88645) is mounted.
*14 Except when the dome attachment (IV3-D10) is mounted.

## Dimensions

* Download CAD file or product manual for larger image/text and more detail.

IV3-500CA/500MA/600CA/600MA/L5C/L5M/L6C/L6M
OP-88634

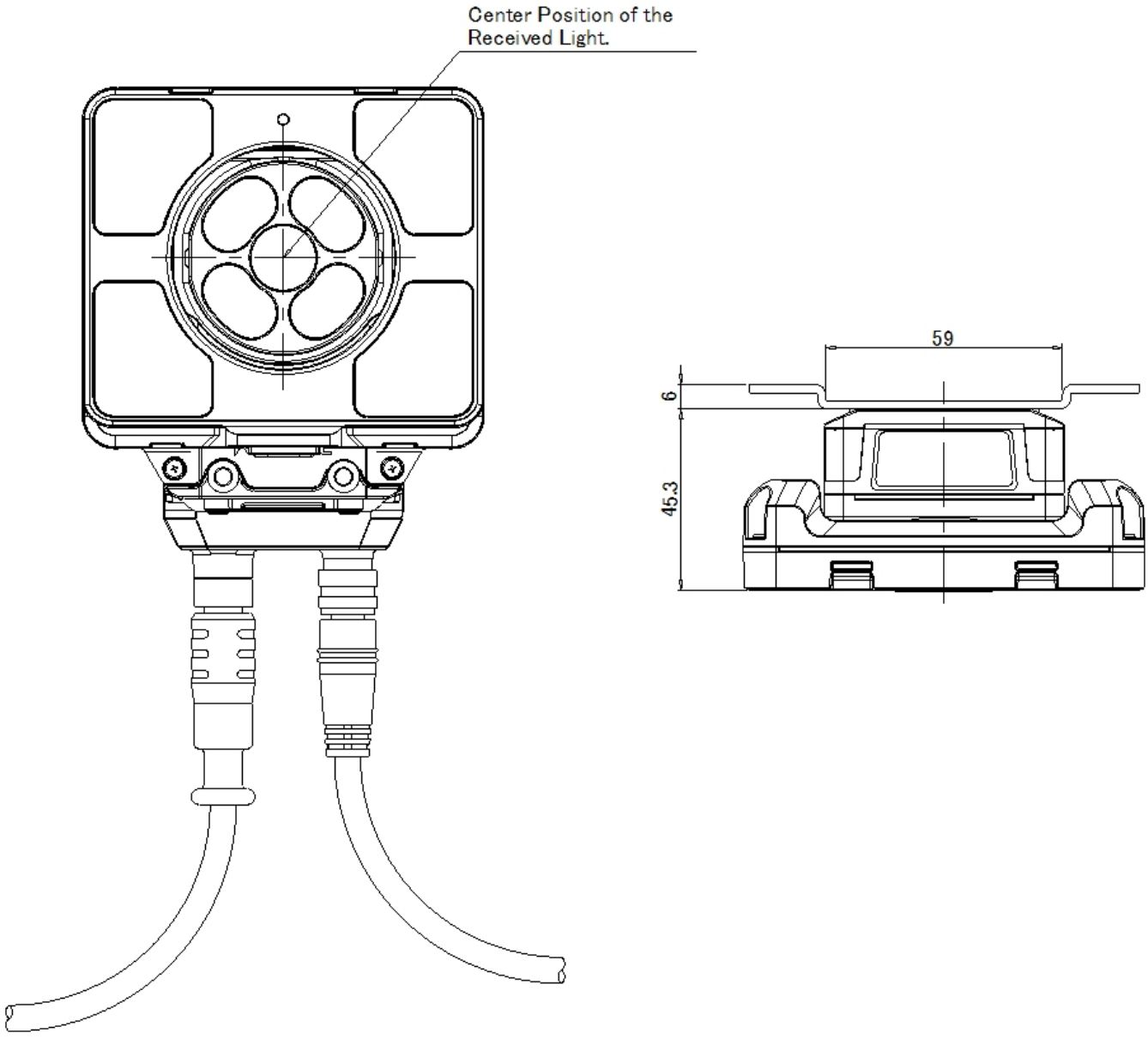

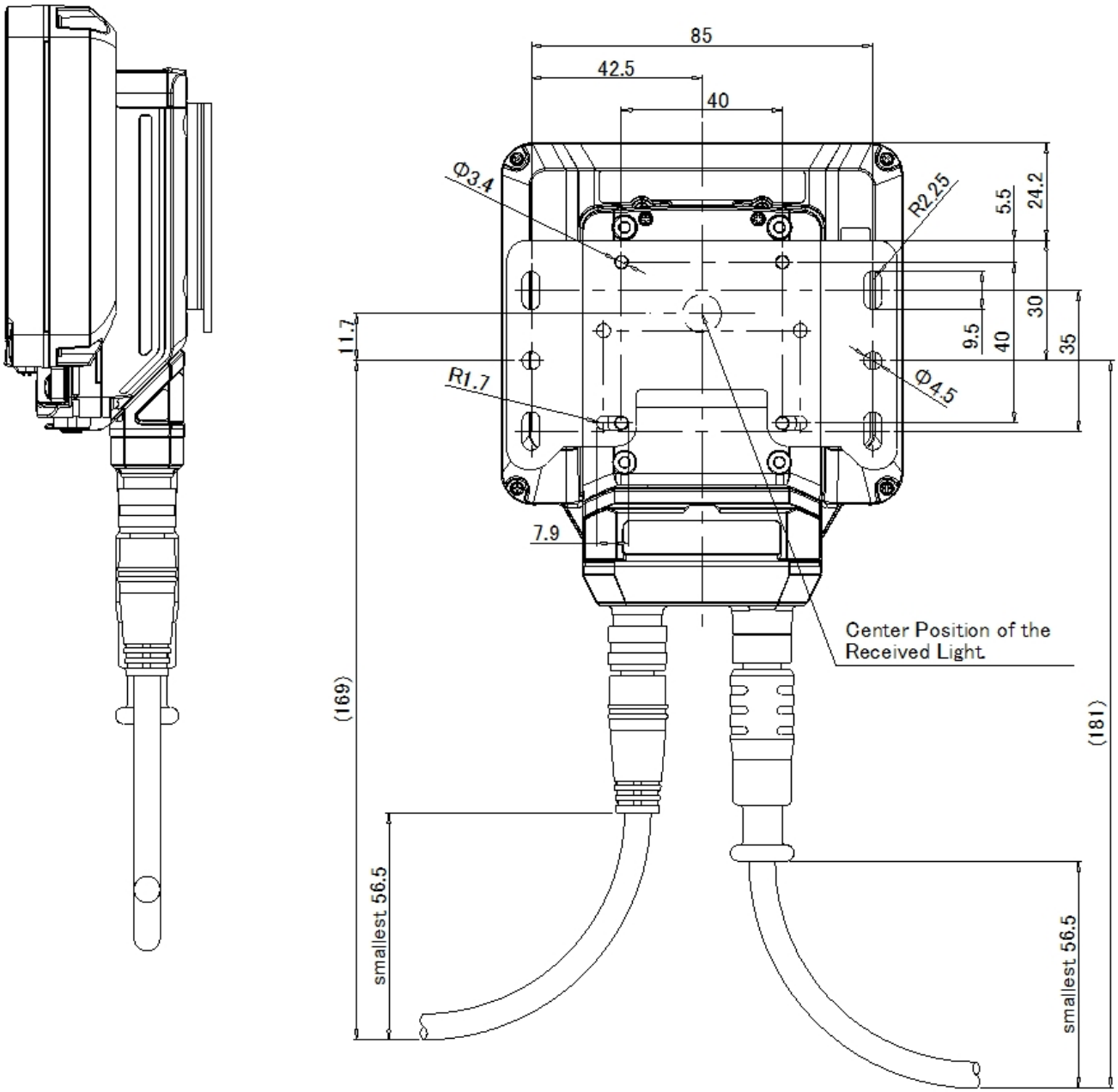
85
42.5
40
Φ3.4
R2.25
5.5
24.2
30
9.5
40
35
11.7
R1.7
Φ4.5
7.9
Center Position of the
Received Light
(169)
(181)
smallest 56.5
smallest 56.5

# IV3-500CA/500MA/600CA/600MA/L5C/L5M/L6C/L6M
# OP-88644/88645



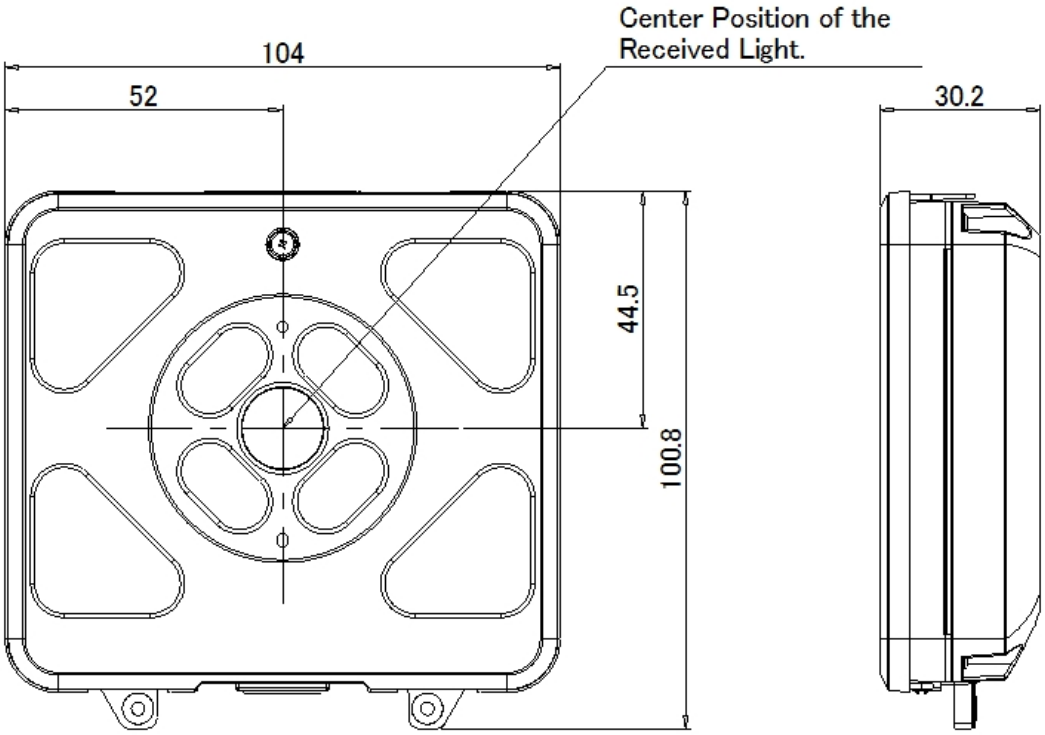

# IV3-500CA/500MA/600CA/600MA/L5C/L5M/L6C/L6M

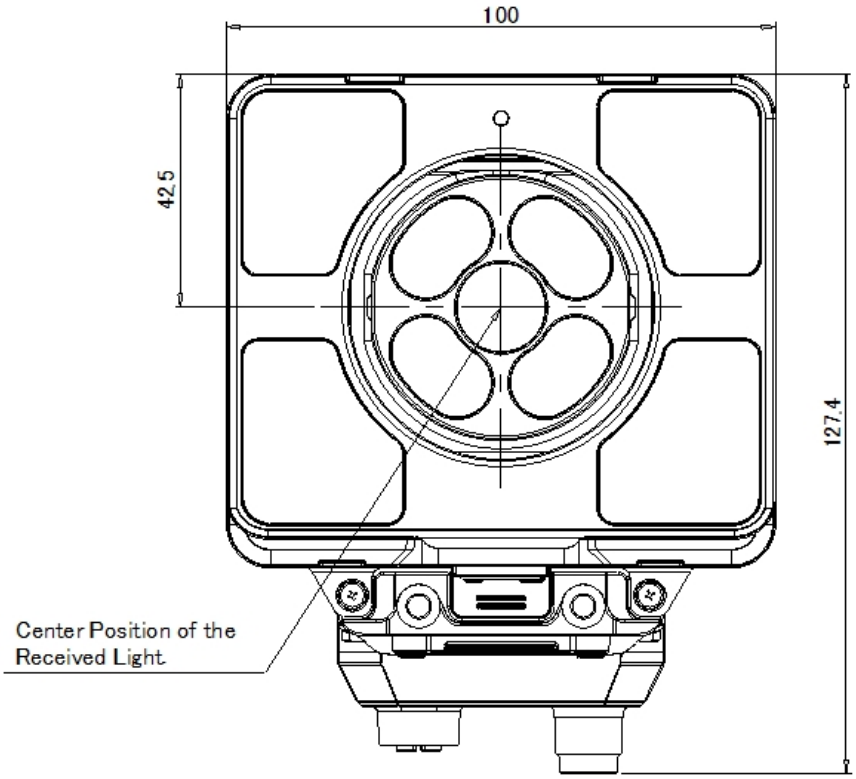


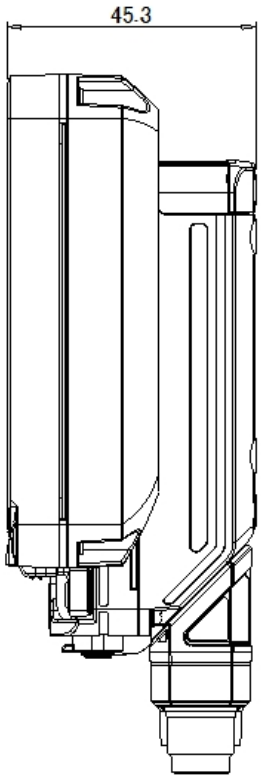

IV3-500CA/500MA/600CA/600MA
OP-88634

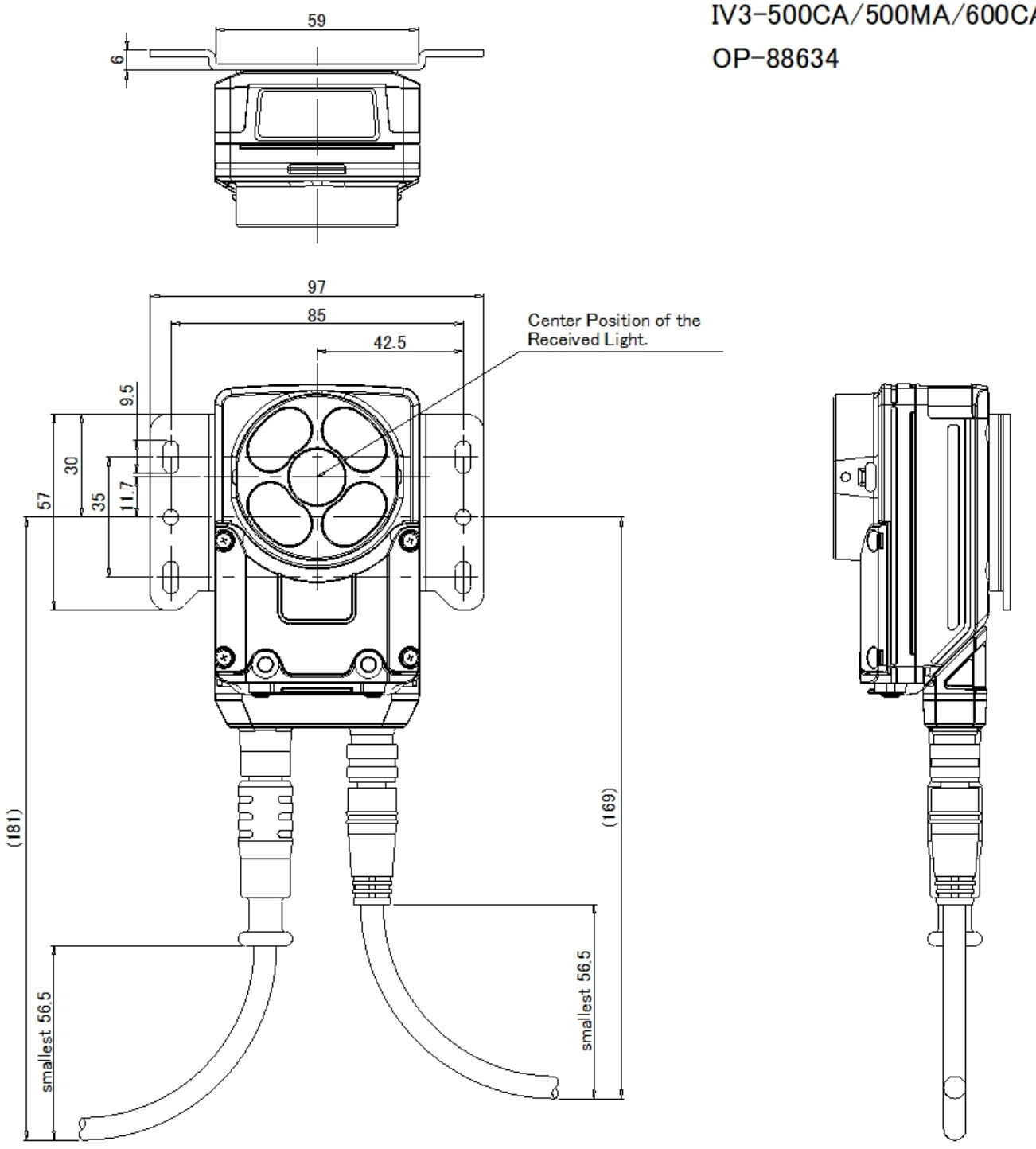

IV3-500CA/500MA/600CA/600MA

OP-88640/88641

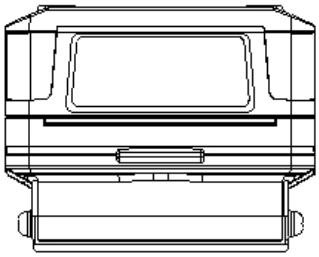

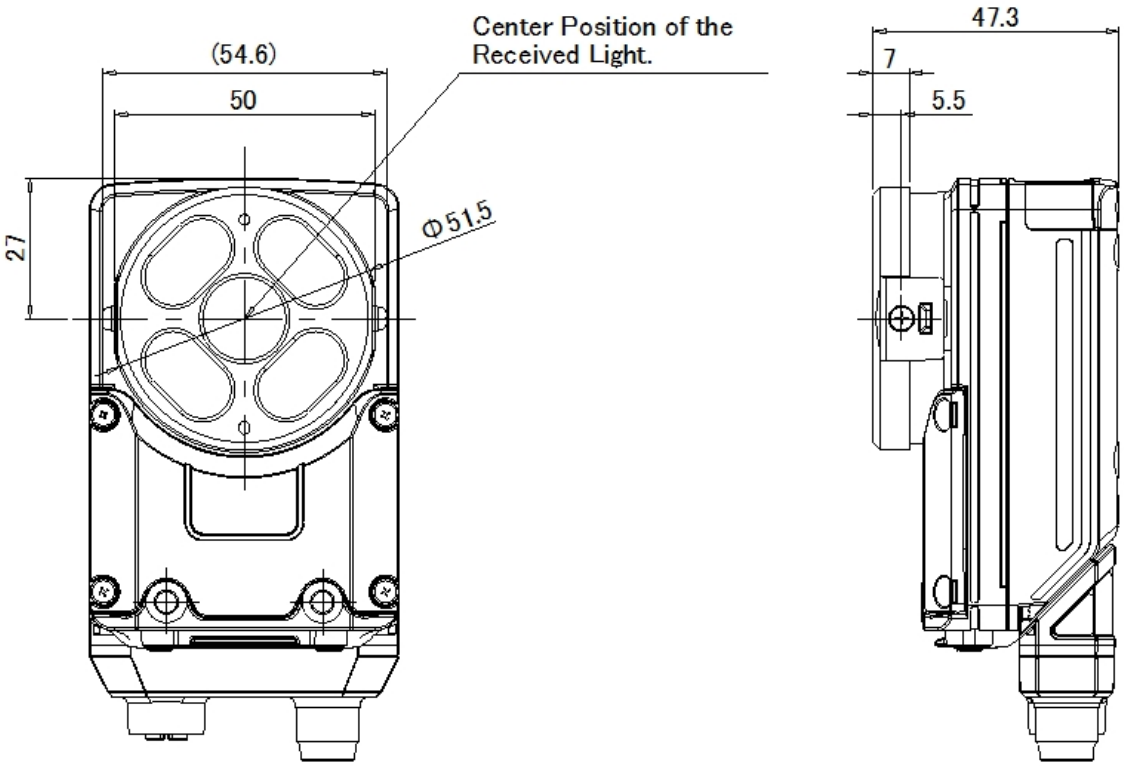

## IV3-500CA/500MA/600CA/600MA

When the connector is rotated 90 degrees.

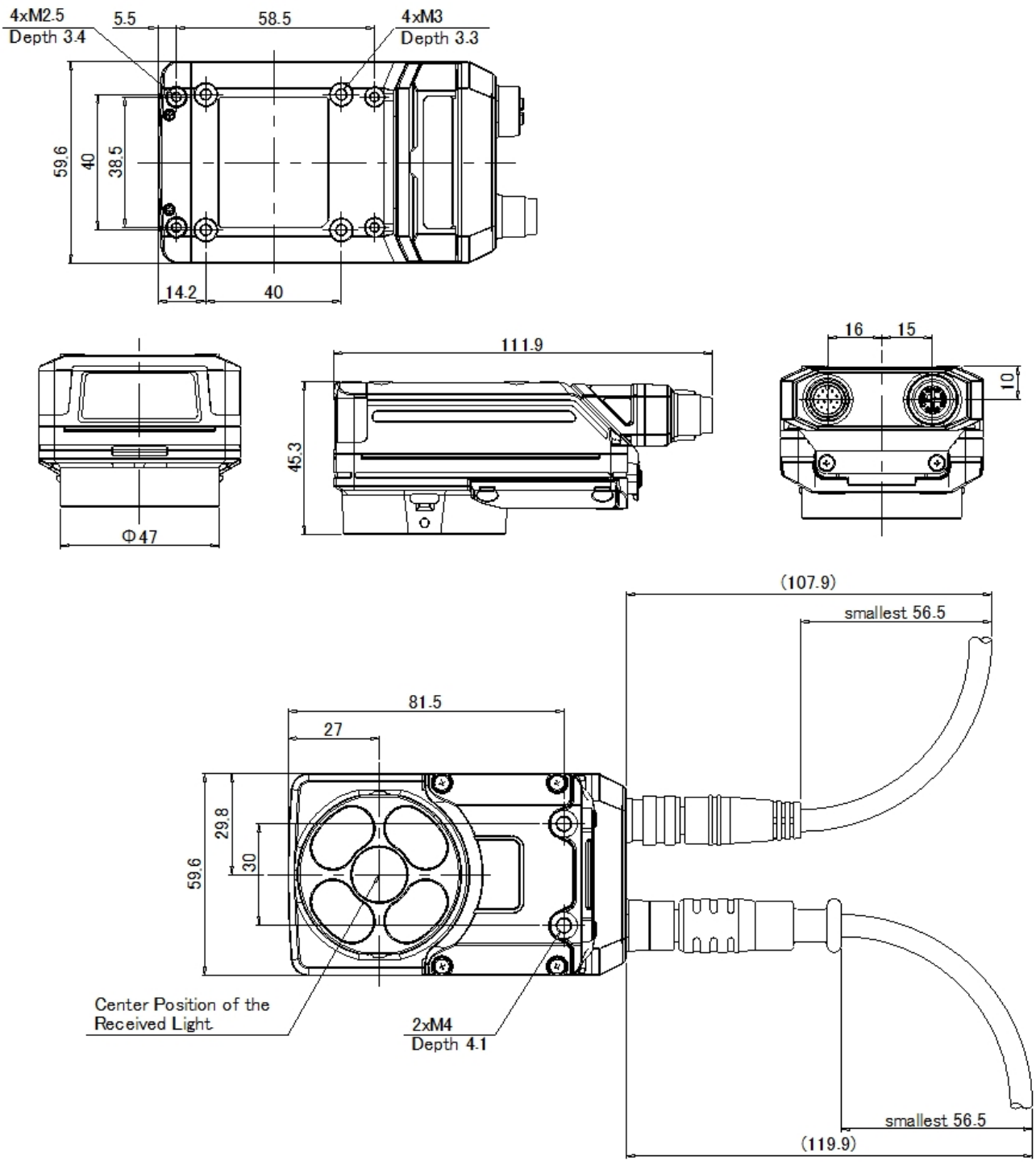

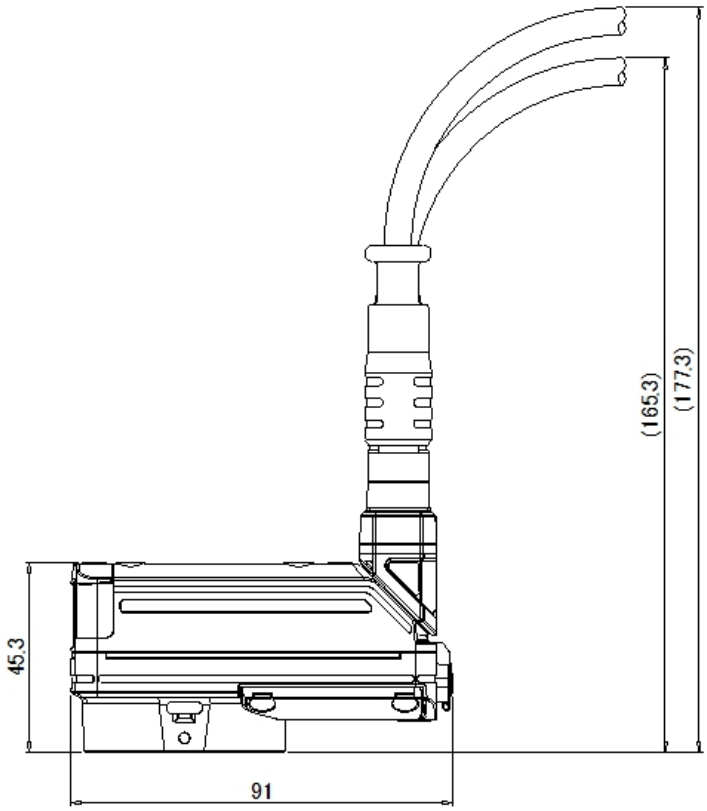
(165.3)
(177.3)
45.3
91

# IV3-D10

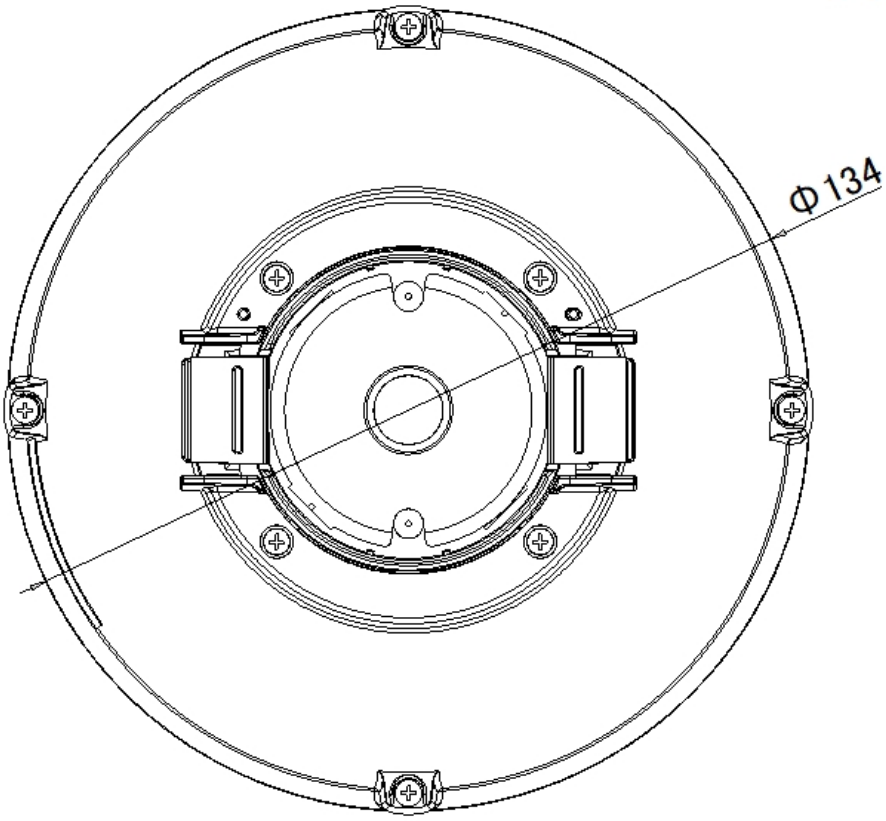

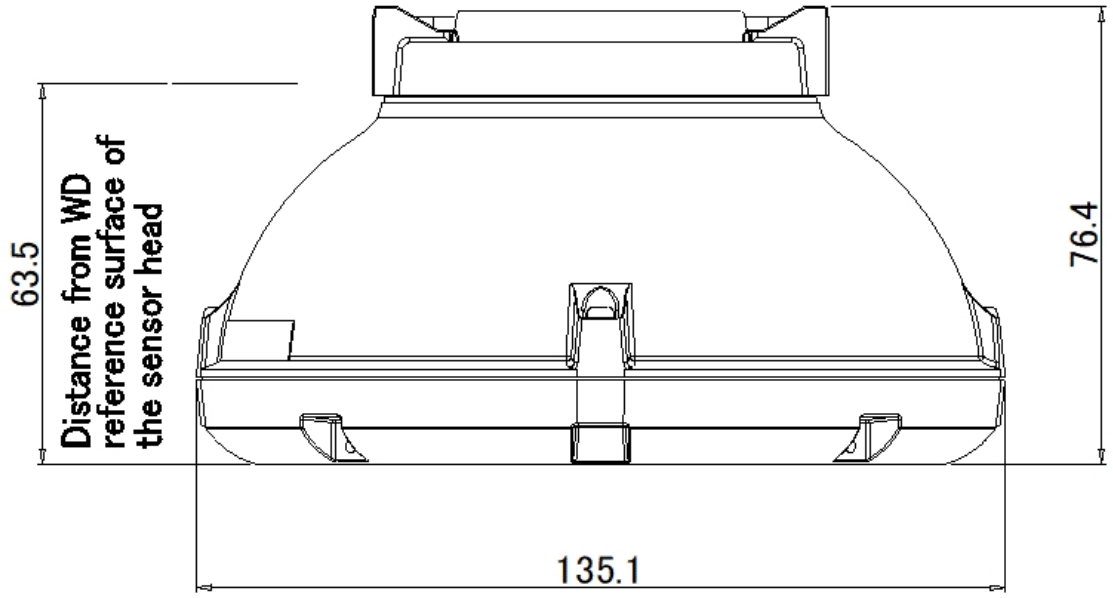
63.5
Distance from WD reference surface of the sensor head
76.4
135.1

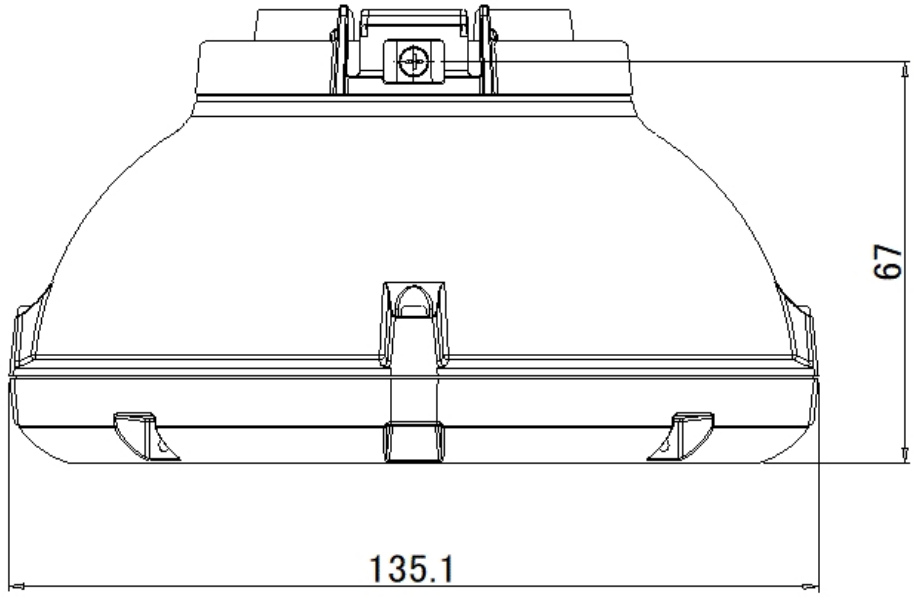
67
135.1

# IV3-500CA/500MA/600CA/600MA/D10/OP-88634

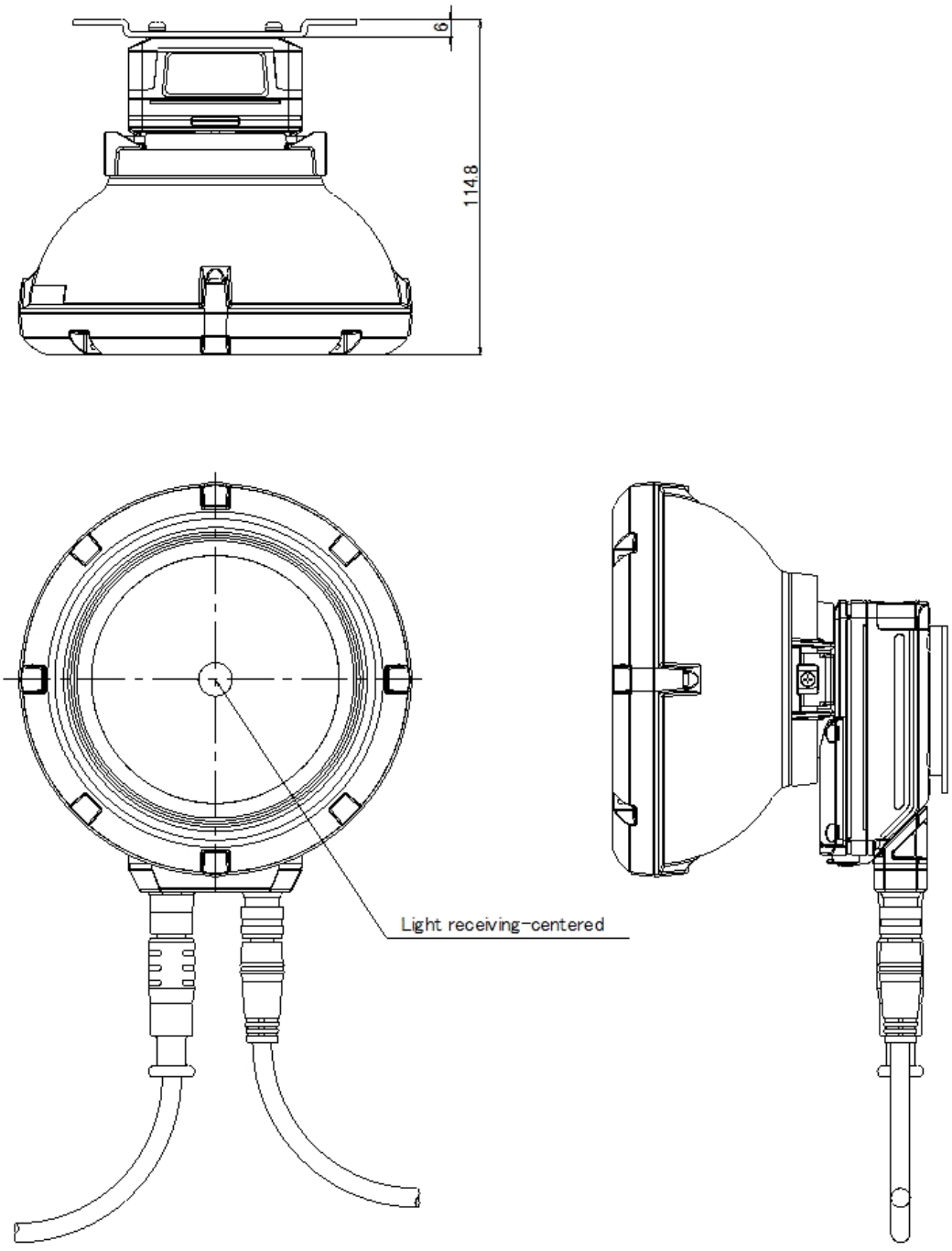

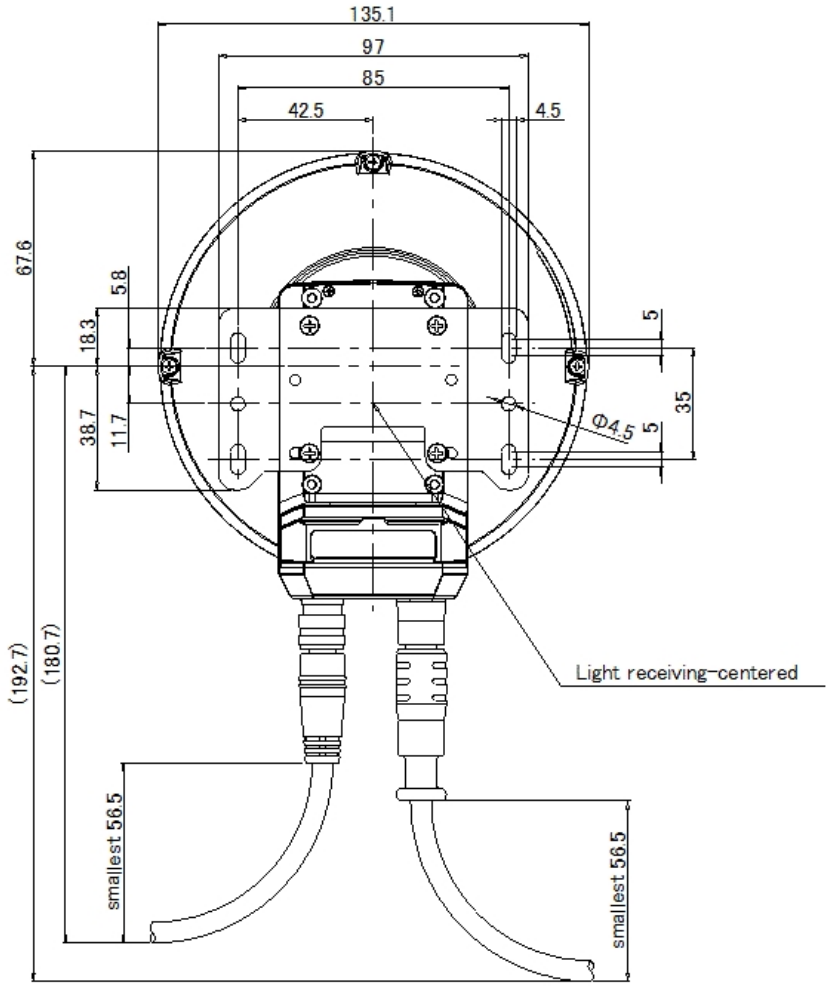
135.1
97
85
42.5
4.5
67.6
5.8
18.3
38.7
11.7
5
35
5
Φ4.5
(192.7)
(180.7)
Light receiving-centered
smallest 56.5
smallest 56.5

# IV3-500CA/500MA/600CA/600MA/D10

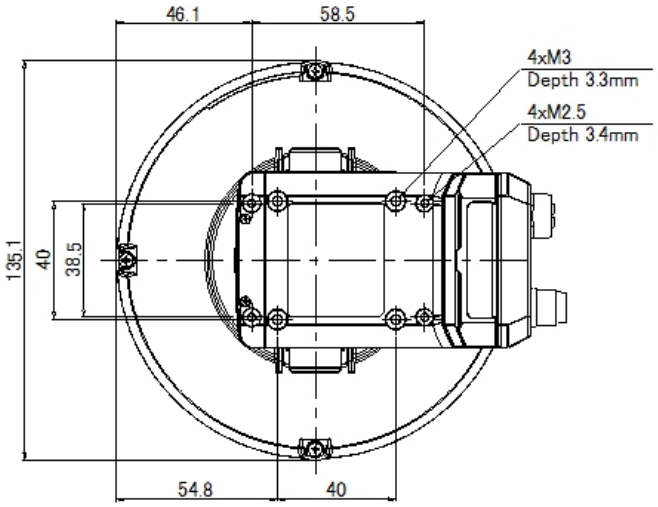


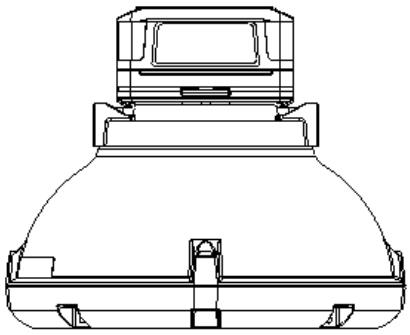

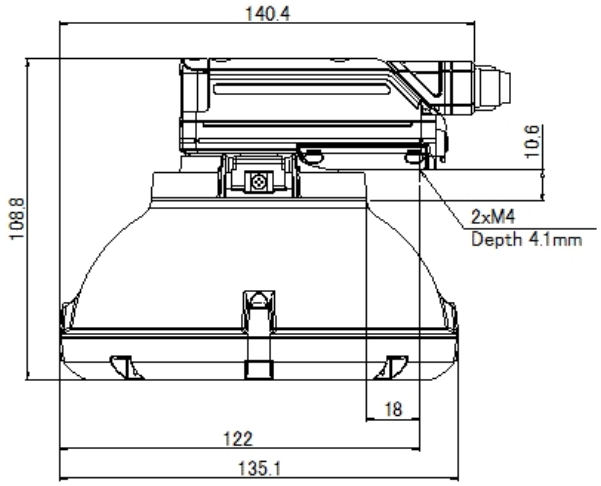


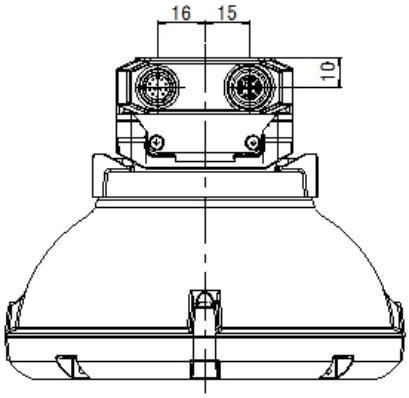

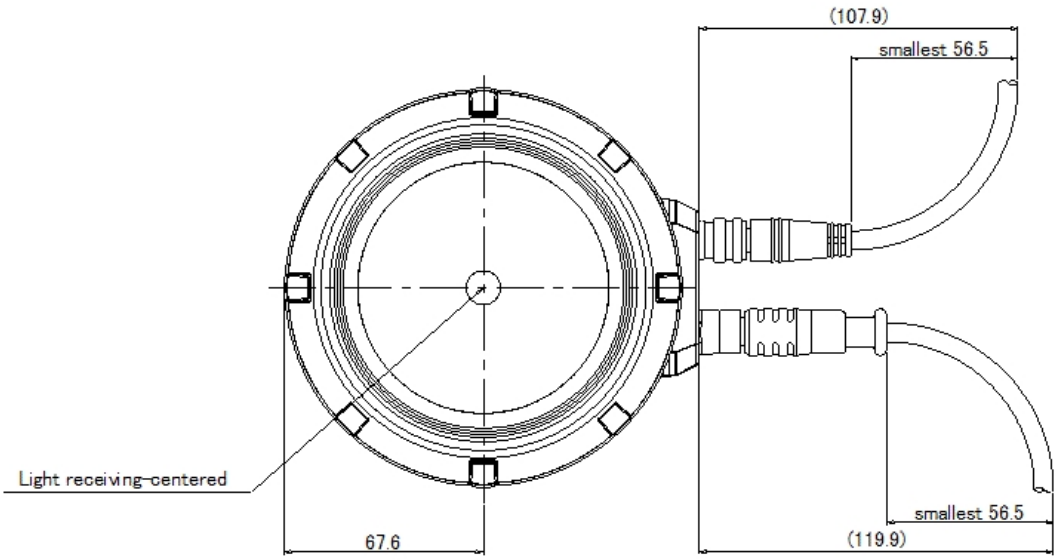


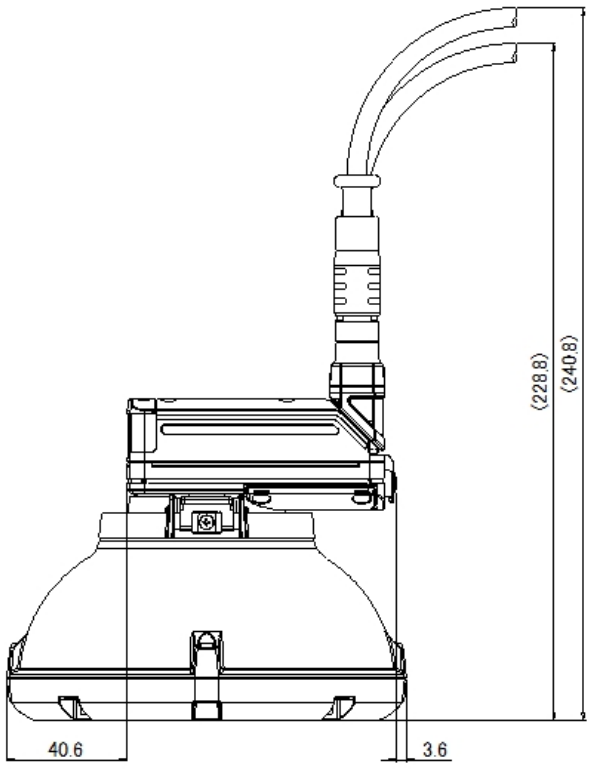


When the connector is rotated 90 degrees.

IV3-500CA/500MA/600CA/600MA/D10/OP-88

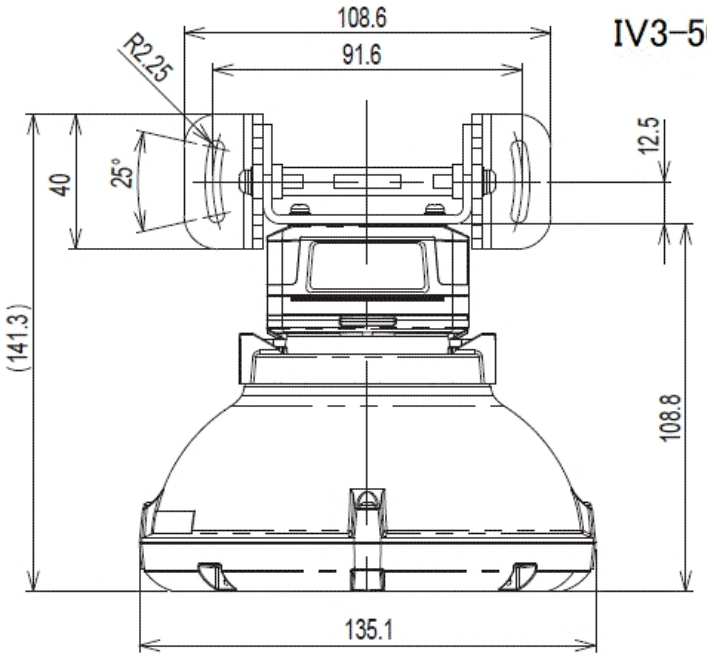


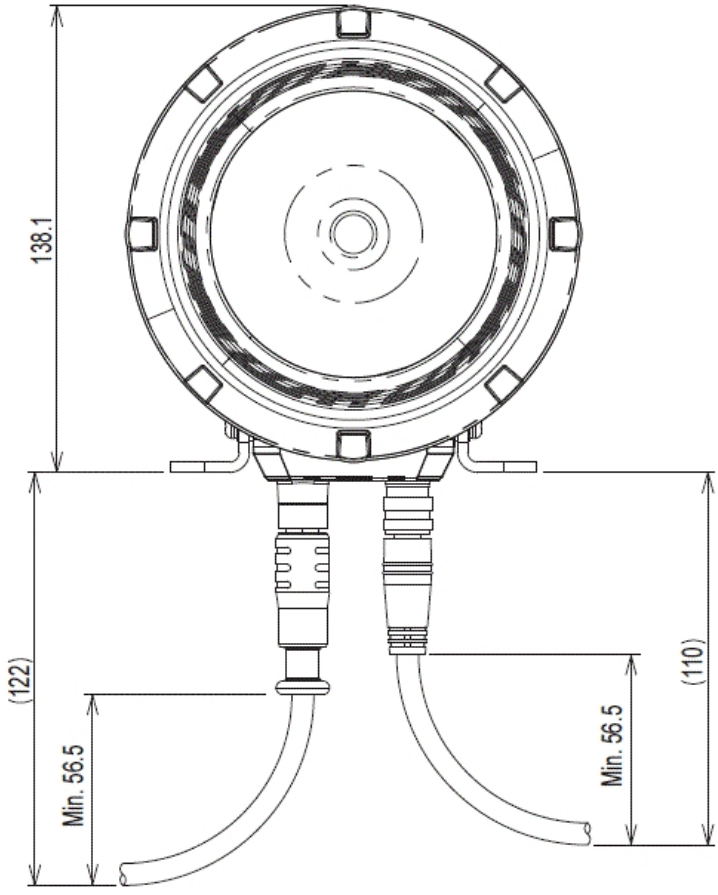


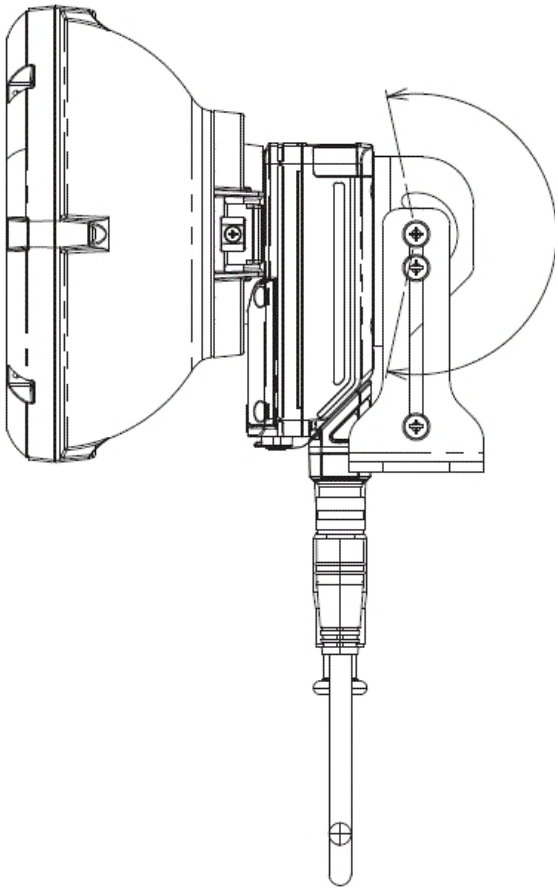

IV3-500CA/500MA/600CA/600MA/D10/

