DIRECTION OF FEED

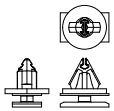

CLIP# 11610926 SHOWN FULL SCALE ABOVE
END TO END, FLAT SIDE DOWN, KEYED

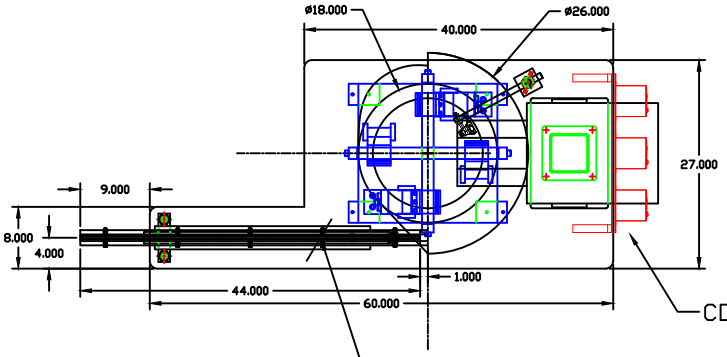

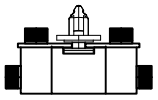

END VIEW OF DISCHARGE TRACK
SHOWN FULL SCALE ABOVE

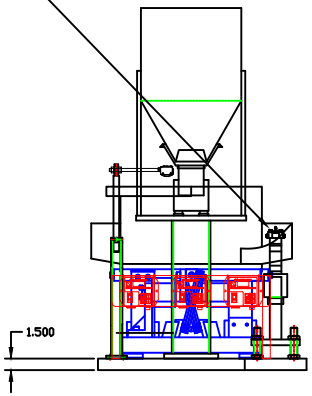

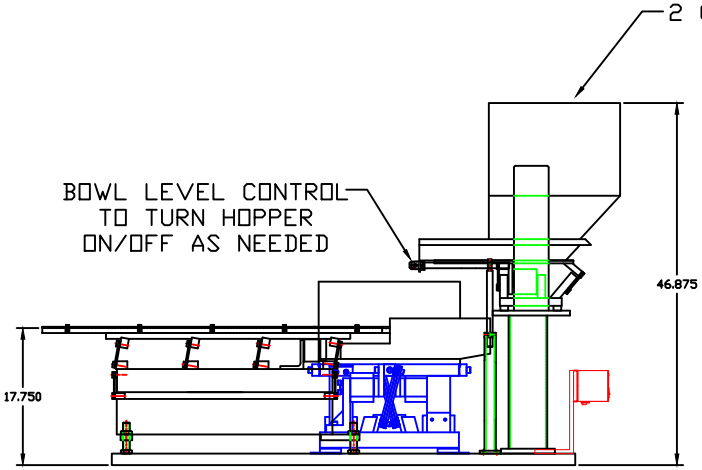

PLEASE PROVIDE YOUR REQUIRED PAINT SPECIFICATIONS. SHERWIN WILLIAMS IS PREFERRED. IF YOU DO NOT HAVE A PAINT MANUFACTURER OR NUMBER WE CAN MATCH TO A PAINT CHIP, OR OUR STANDARD PAINT COLORS ARE VISTA GREEN, SAFETY BLUE OR MACHINE GRAY.
PLEASE SPECIFY_____

(1) SYSTEM AS SHOWN ABOVE

DETAIL	REQ'D	PART NUMBER MANUFACTURER	DESCRIPTION

CUSTOMER P.O. NO.-
SYSTEMS REQ'D (1) AS SHOWN
RATE PER TRACK 50-60
MAXIMUM DB RATING 80 DBA
ELECTRICAL STD. SHIPPED LOOSE
MISC. -
VOLTAGE 120 VAC CYCLE 60 Hz
BOWL COATING POLY-U
TRACK COATING STAINLESS
PAINT COLOR CALL CUSTOMER

FEEDING CONCEPTS, INC.
WE ARE YOUR AUTOMATION SPECIALIST
FAX 317-773-1494

CUSTOMER
SRG GLOBAL
PART NAME
CLIP# 11610926
PART NUMBER
11610926
SHT. 1 SHTS. 1
SCALE 1/8 & NOTED
DATE 9/2/22
DRAWN BY JAMES
CHECKED BY TH
DWG. NO. FC-22-10923
MECHANICAL

DO NOT SCALE
TOLERANCE UNLESS OTHERWISE SPECIFIED
1 PLACE DECIMAL DIMS. ± .060
2 PLACE DECIMAL DIMS. ± .030
3 PLACE DECIMAL DIMS. ± .005
4 PLACE DECIMAL DIMS. ± BASIC
ANGLES ± 0° 30'