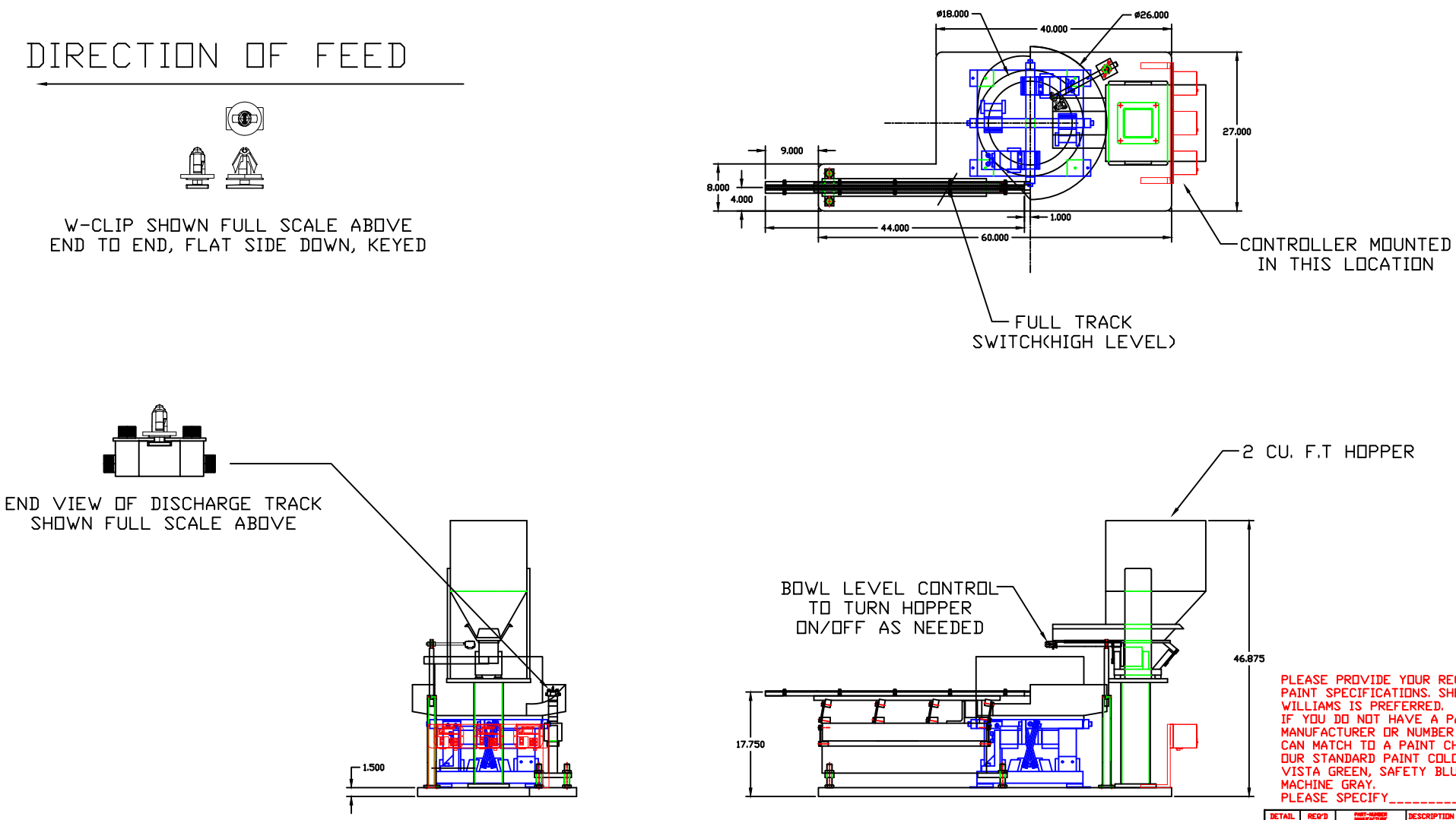

PLEASE PROVIDE YOUR REQUIRED PAINT SPECIFICATIONS. SHERWIN WILLIAMS IS PREFERRED.
IF YOU DO NOT HAVE A PAINT MANUFACTURER OR NUMBER WE CAN MATCH TO A PAINT CHIP, OR OUR STANDARD PAINT COLORS ARE VISTA GREEN, SAFETY BLUE OR MACHINE GRAY.
PLEASE SPECIFY_____

(1) SYSTEM AS SHOWN ABOVE

DO NOT SCALE

TOLERANCE UNLESS OTHERWISE SPECIFIED
1 PLACE DECIMAL DIMS. ± .060
2 PLACE DECIMAL DIMS. ± .030
3 PLACE DECIMAL DIMS. ± .005
4 PLACE DECIMAL DIMS. ± BASIC
ANGLES ± 0° 30'

DETAIL	REQ'D	PART-NUMBER MANUFACTURE	DESCRIPTION

CUSTOMER P.O. NO. -
SYSTEMS REQ'D (1) AS SHOWN
RATE PER TRACK 50-60
MAXIMUM DB RATING 80 DBA
ELECTRICAL STD. SHIPPED LOOSE
MISC. -
VOLTAGE 120 VAC CYCLE 60 Hz
BOWL COATING POLY-U
TRACK COATING STAINLESS
PAINT COLOR CALL CUSTOMER

FEEDING CONCEPTS, INC.
18635 MOUNTAIN BLVD.
MOBLESVILLE, IN 46060
317-773-2040 FAX 317-773-1494

WE ARE YOUR AUTOMATION SPECIALIST

CUSTOMER
SRG GLOBAL
PART NAME
W-CLIP
PART NUMBER
W-CLIP
SHT. 1 SHTS. 1
SCALE 1/8 & NOTED
DATE 9/2/22
DRAWN BY JAMES
DWG. NO. FC-22-18924
MECHANICAL
CHECKED BY TH