Star Automation

46062 Noblesville
15235 Herriman Blvd.
Phone 317-773-2040 ex.106
Fax
E-mail zach@feedingconcepts.com

Customer	Jon Georgeson
Street	N90 W14401 Commerce Drive
ZIP code / City	53051 Menomonee Falls
Phone	262-415-0002
Fax	
E-mail	jgeorgeson@starautomation.com

End customer	Star Automation
Street	N90 W14401 Commerce Drive
ZIP code / City	53051 Menomonee Falls
Phone	262-415-0002
Fax	
E-mail	jgeorgeson@starautomation.com

Project name	Star Automation FC-22-19106
Job number	FC-22-19106
Project description	Poly Carb Insert Controller
Commission	
Responsible for project	Jon Georgeson
Created on	3/20/23
Project end	
Edit date	05/21/23
by (short name)	Zach Beck
Number of pages	5

Place of installation	N90 W14401 Commerce Drive
Manufacturer (company)	Star Automation
Make	
Part feature	None
Input lead	120VAC
Power supply	
Control voltage	12/24VDC
Type	
Environmental consideration	
Regulation	
Degree of protection	IP65
Enclosures	Saginaw Enviroline

Table of contents

F06_002_en_US

Function designation	Location designation	Page	Page description	supplementary page field	Date	Edited by
		1	Title page		08/05/21	EPL
		2	Table of contents : 1 - 4		08/05/21	EPL
		3	Schematic single-line		08/05/21	EPL
		4	Schematic multi-line		03/30/21	EPL

A B C D E F G H I J

301 302 303 304 305 306 307 308 309 310 311 312 313 314 315 316 317 318 319 320 321 322 323 324 325 326 327 328 329 330 331 332 333 334 335 336 337 338 339 340

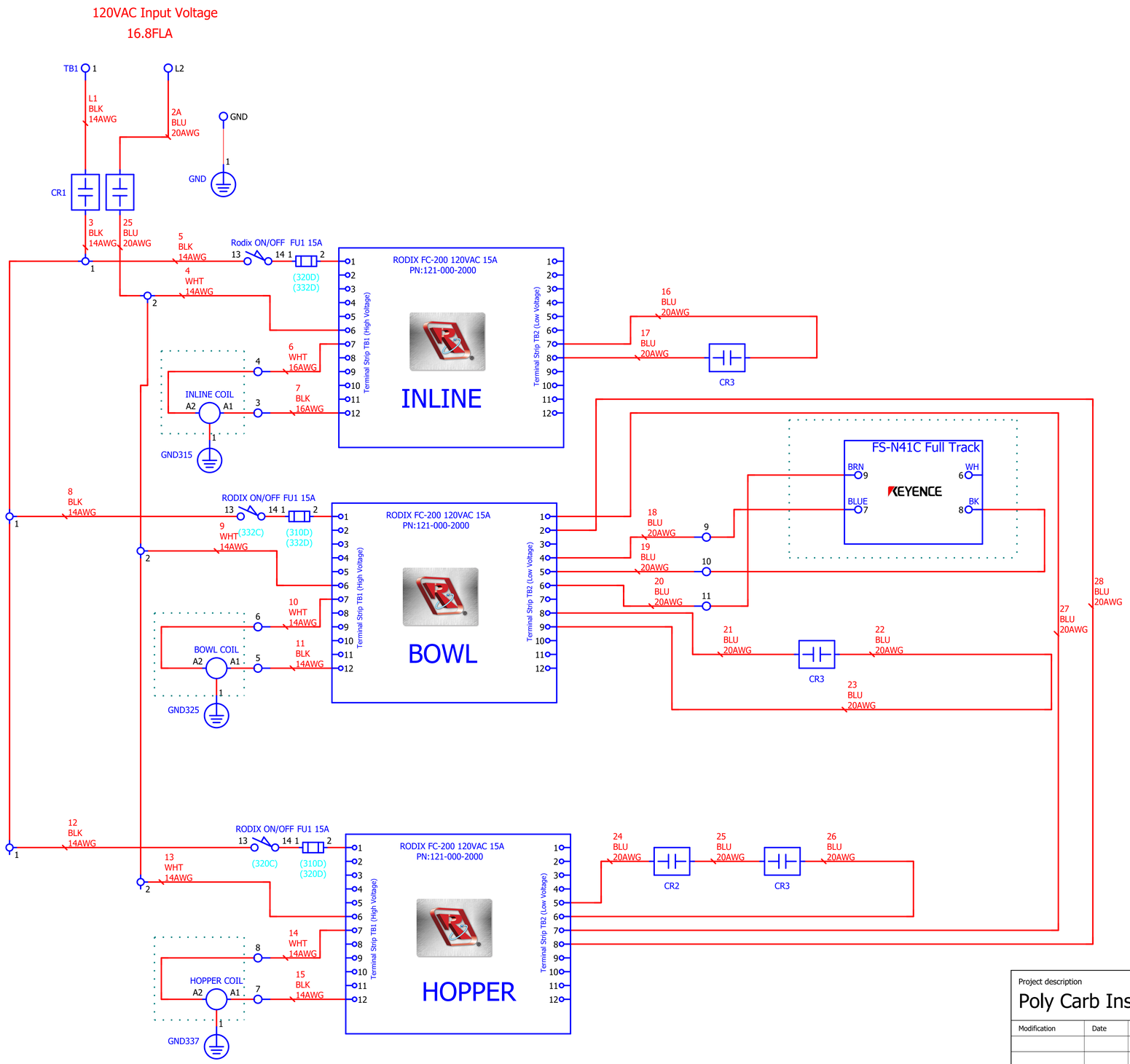

Project description: **Poly Carb Insert Controller**					Drawing number
					Customer number
Modification	Date	Name		Date	Name
			Ed.	03/24/23	Zach Beck
			Appr.	05/18/23	Zachary Beck
			Schematic single-line		
Original					
Replacement of					
Replaced by			Commission		
Previous page 2			Total no. of pages 5		

Customer	Star Automation
	N90 W14401 Commerce Drive
Function designation	Location designation
=	+
Page group 5	Pg. 3
	Next page 4

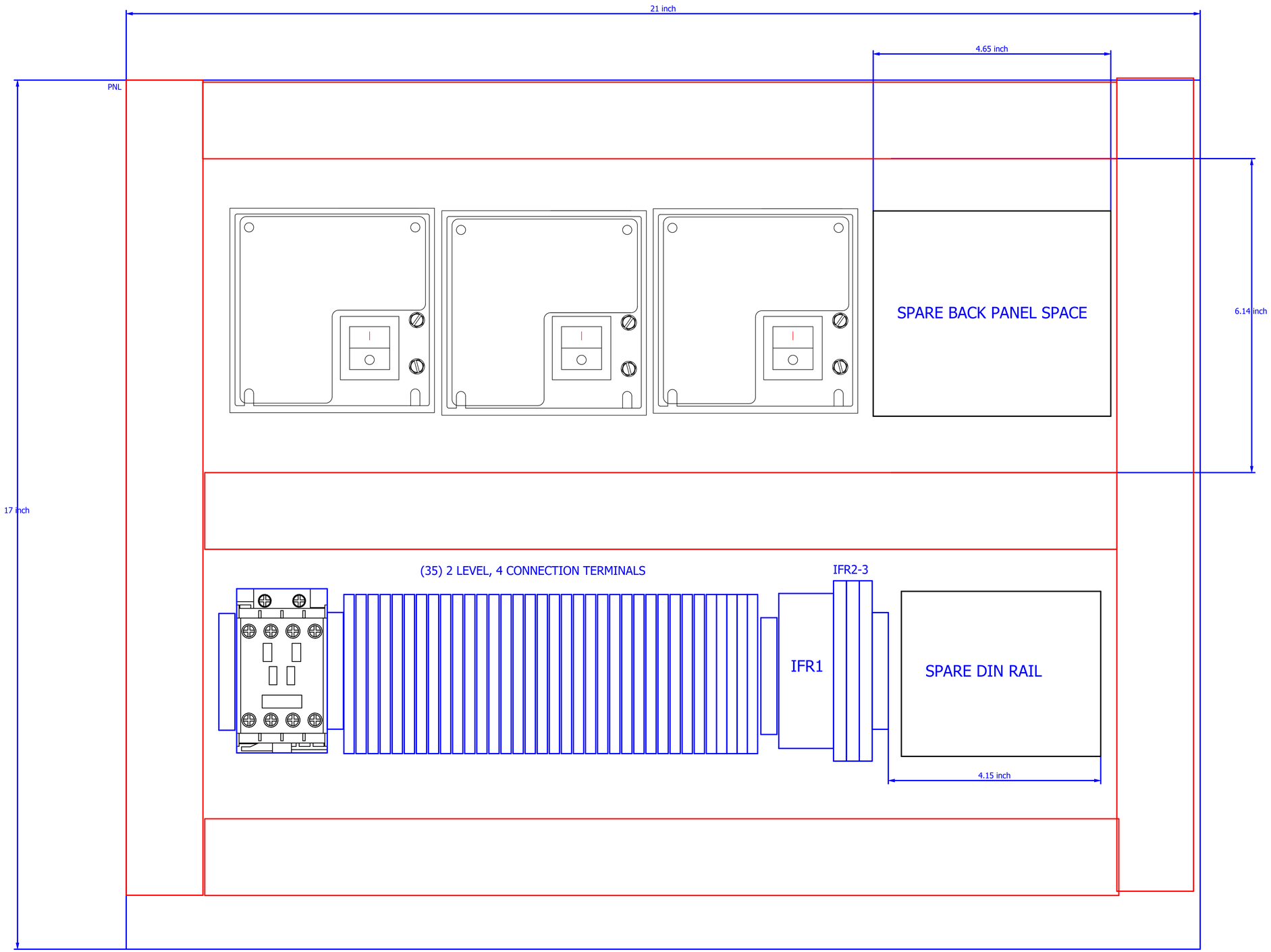

Star Automation	Project name Star Automation FC-22-19106	Drawing number Customer code	Customer Star Automation N90 W14401 Commerce Drive	Modification	Date	Name		Date	Name	Original Replacement of Replaced by Previous page 3	Title page Commission Total no. of pages 5	Function designation = Page group 5	Location designation + Pg. 4 Next page 5
							Ed.	03/24/23	Zach Beck				
							Appr.	03/31/23	Zachary Beck				

STAR AUTOMATION ROBOT I/O HANDSHAKE

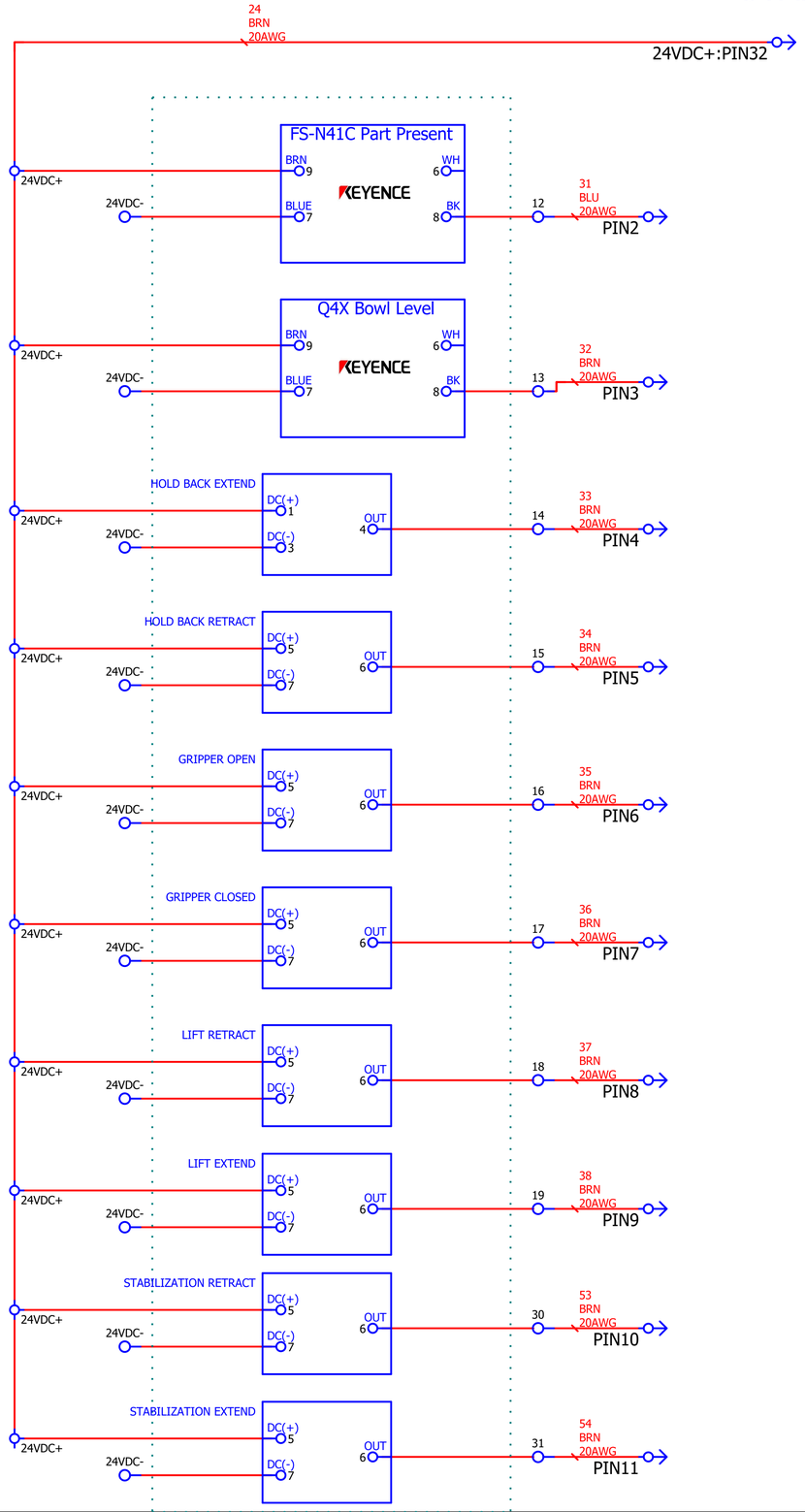

Project description						Drawing number	
Poly Carb Insert Controller						Customer number	
Modification	Date	Name		Date	Name	Customer	
			Ed.	03/24/23	Zach Beck	Star Automation	
			Appr.	05/18/23	Zachary Beck	N90 W14401 Commerce Drive	
			Title page				
Original						Function designation	Location designation
Replacement of						=	+
Replaced by			Commission				Pg. 5
Previous page	4		Total no. of pages	5		Page group 5	Next page