RevNo	Revision note	Date	Signature	Checked

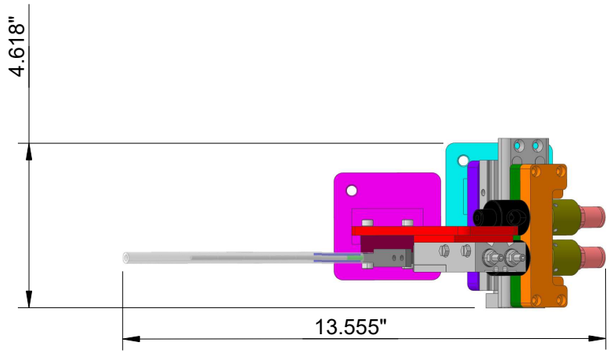

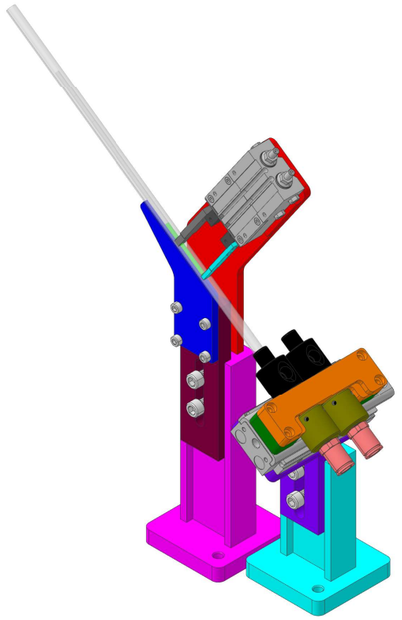

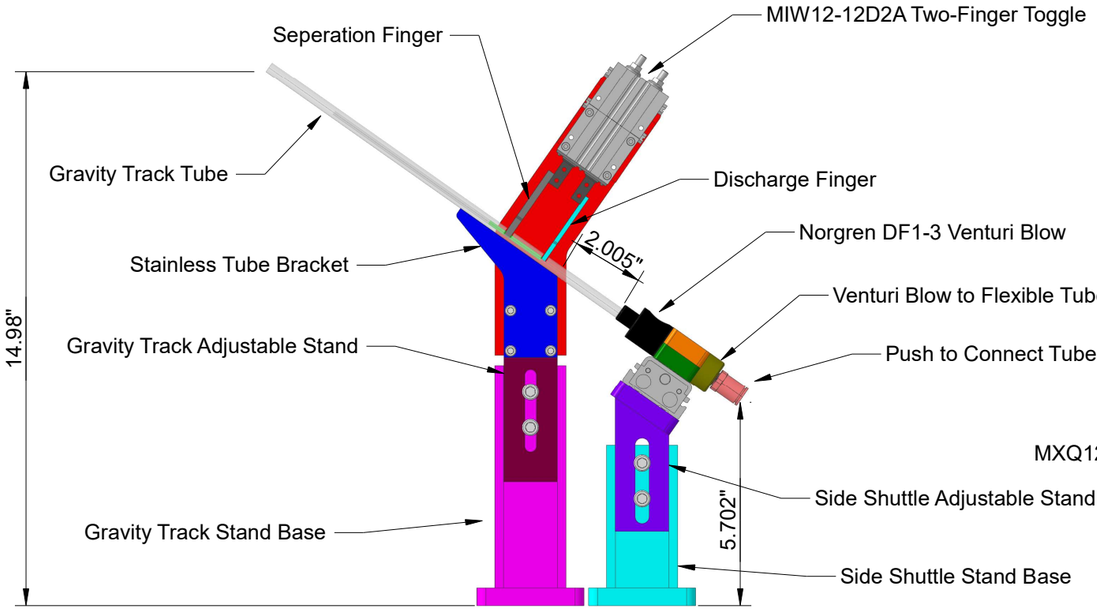

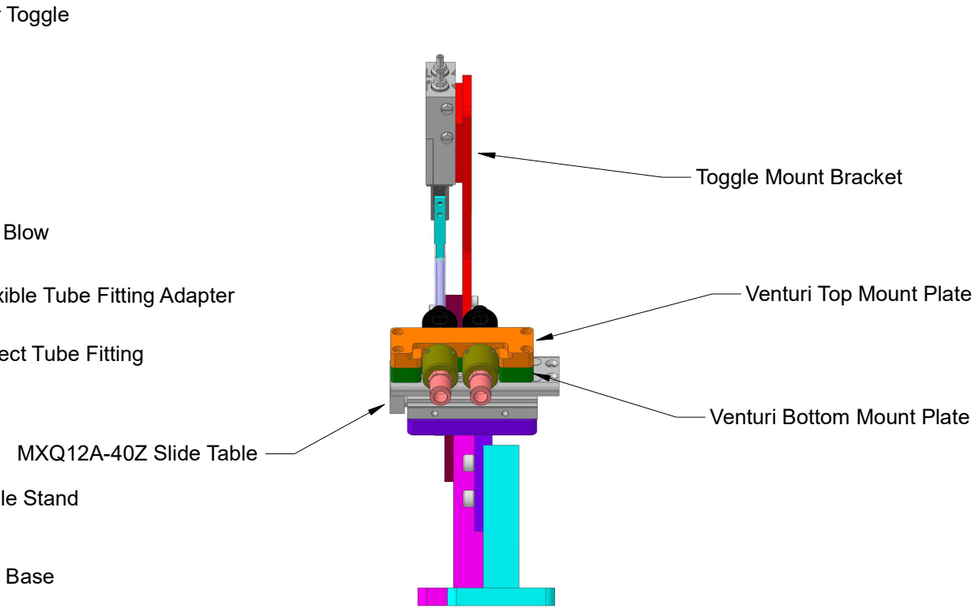

Itemref	Quantity	Title/Name, designation, material, dimension etc			Article No./Reference	
Drawn by Zach B.		Checked by	Approved by - date	File name	Date 9/5/23	Scale 1:1

FEEDING CONCEPTS, INC.
Automatic Parts Feeding Equipment
15235 Herriman Blvd.
Noblesville, IN 46060
(317) 773-2040

Gear Pin Escapement & Blow Feed Assembly

Advance Mech. FC-23-19807 | Edition | Sheet 1 OF 1