NOTE: DEBUR ALL EDGES
FINISH: Glass Bead Blast

RevNo	Revision note	Date	Signature	Checked

Material	QTY
.500" x 1.50" x 4.125" 6061 ALuminum Flat Bar	1

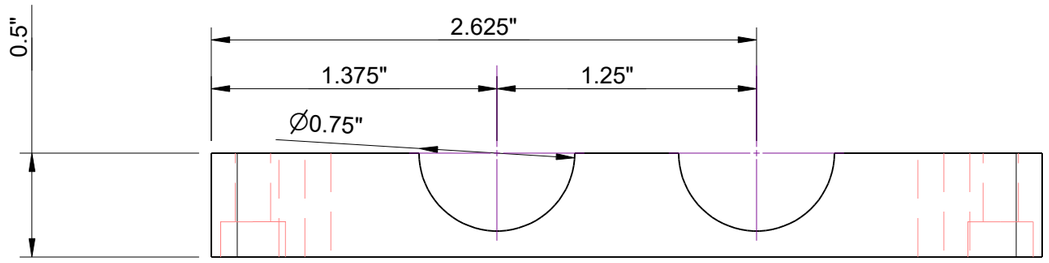

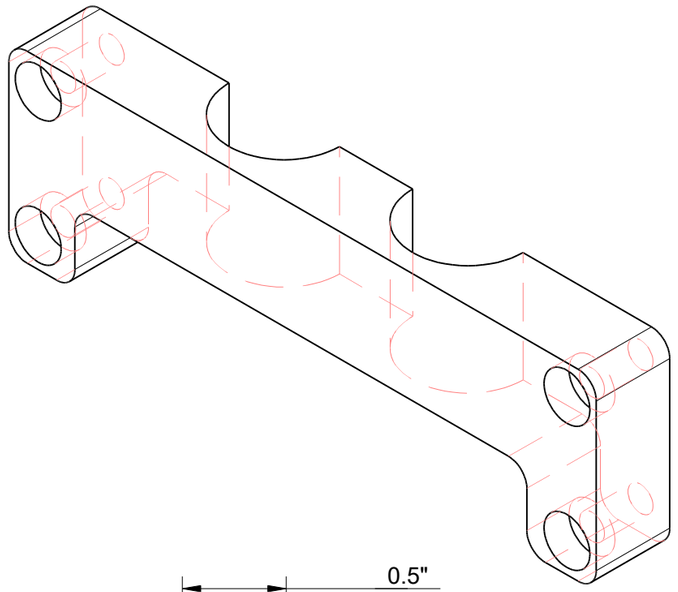

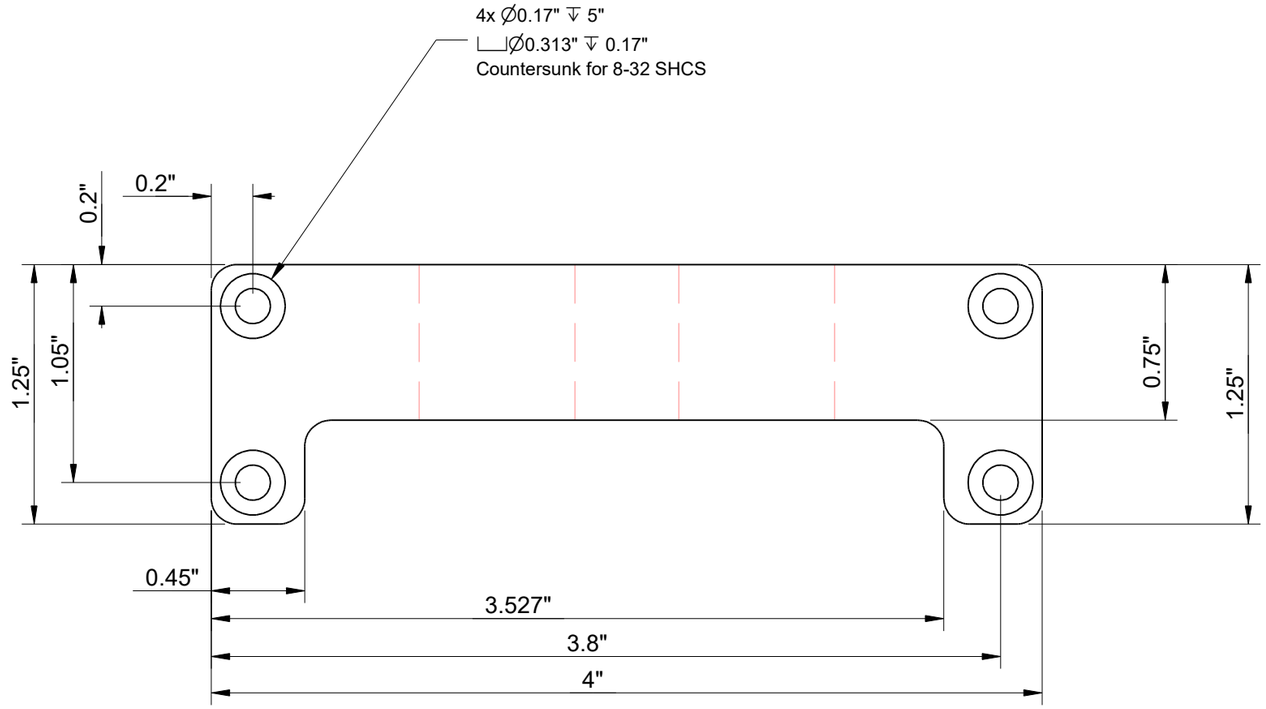

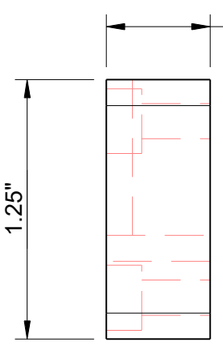

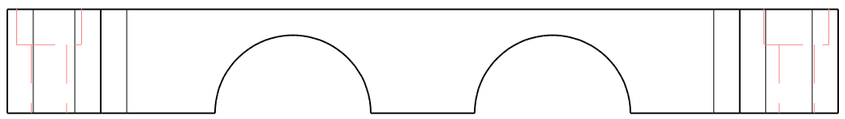

Itemref	Quantity	Title/Name, designation, material, dimension etc			Article No./Reference	
Drawn by Zach B.		Checked by	Approved by - date	File name	Date 9/15/23	Scale 1:1

FEEDING CONCEPTS, INC.
Automatic Parts Feeding Equipment
15235 Herriman Blvd.
Noblesville, IN 46060
(317) 773-2040

Venturi Camp Block		
Advance Mech. FC-23-19808	Edition	Sheet 1 OF 1