

IV3-CP50

Control panel

Specifications

Model		IV3-CP50
Display panel		5.7" TFT color LCD 640 × 480 dot (VGA)
Backlight	Method	White LED
	Duration	Approx. 50000 hours (25 ˚C 77°F)
Touch panel	Method	Analog resistive
	Actuating force	0.8 N or lower
Languages		English / Japanese / Chinese (Simplified)*1
Indicators		PWR, SENSOR
Ethernet	Standard	100BASE-TX*2
	Connector	M12 4 pin connector*2
Expanded memory		USB flash memory*3
Ratings	Power voltage	24 VDC ±10% (including ripple)
	Current consumption	0.3 A or less
Environmental resistance	Enclosure rating	IP40
	Ambient temperature	0 to +50°C 32 to 122°F (No freezing)
	Relative humidity	35 to 85%RH (No condensation)*4
	Drop resistance	1.3 m 4.3' over the concrete (2 times each in the arbitrary direction)
	Vibration resistance	10 to 55 Hz, 0.7 mm 0.03" double amplitude, 2 hours each for X, Y, and Z axes
Material		Main unit case: PC Power connector: brass + Ni coat Ethernet connector: Zinc + Ni coat, PA USB connector cover: EPDM Pen holder: PC Hook for adapter: POM LED lamp cover: PC Mounting adapter: PC Stylus: POM
Weight		Control panel: Approx. 450 g 15.89 oz A mounted with the wall mounting adapter and the stylus: Approx. 485 g 17.12 oz

*1 When connected to the IV3 Series. When connected to the IV/IV2 Series, the supported languages are the same as the IV2-CP50.
*2 Especially for connecting to the IV3 Series, IV2 Series, and IV Series.
*3 Use a product recommended by KEYENCE.
*4 If 18 the ambient temperature exceeds 40°C 104°F, use the sensor head in the absolute humidity of 40°C 104°F 85% RH or lower.

Dimensions

* Download CAD file or product manual for larger image/text and more detail.

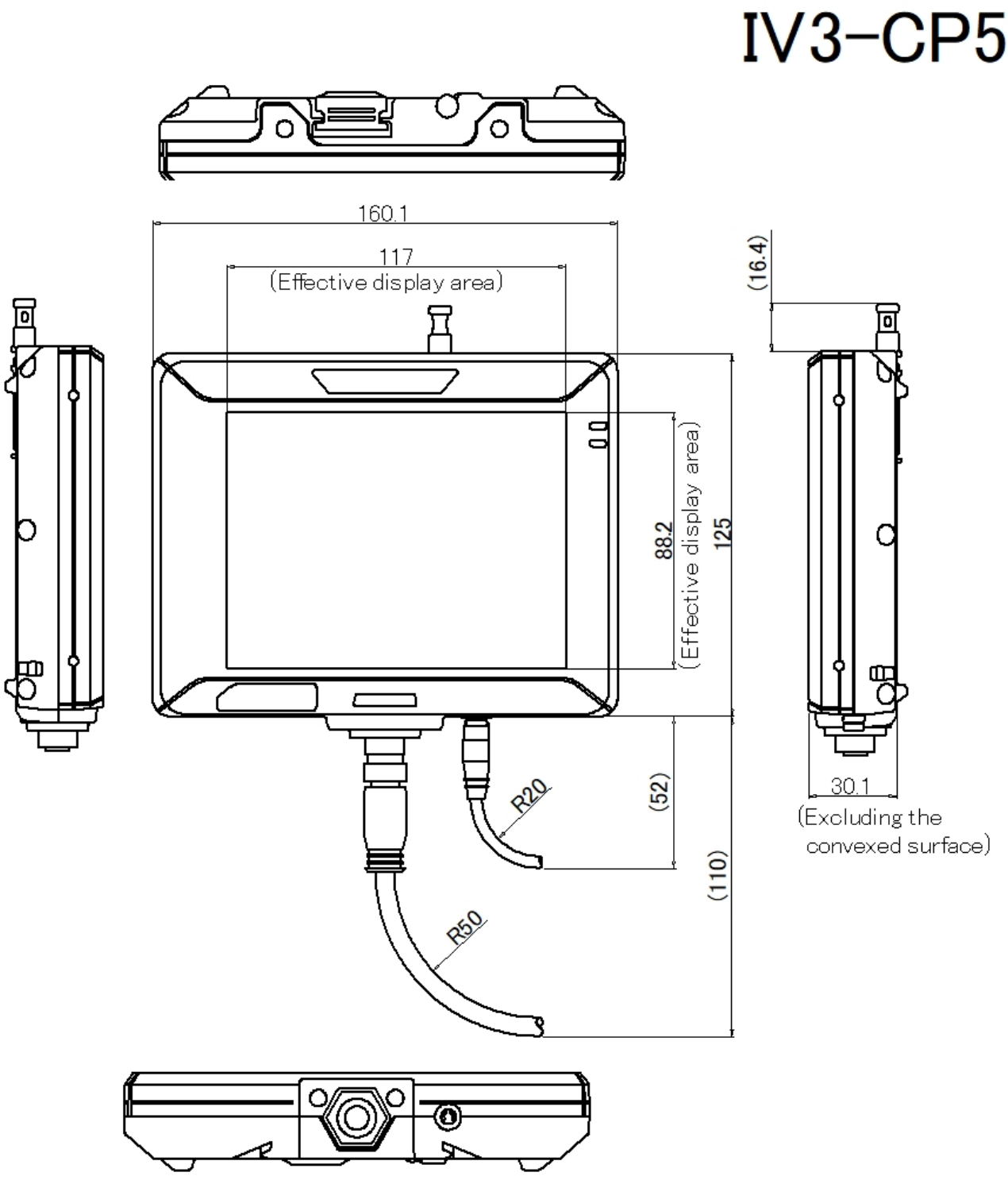

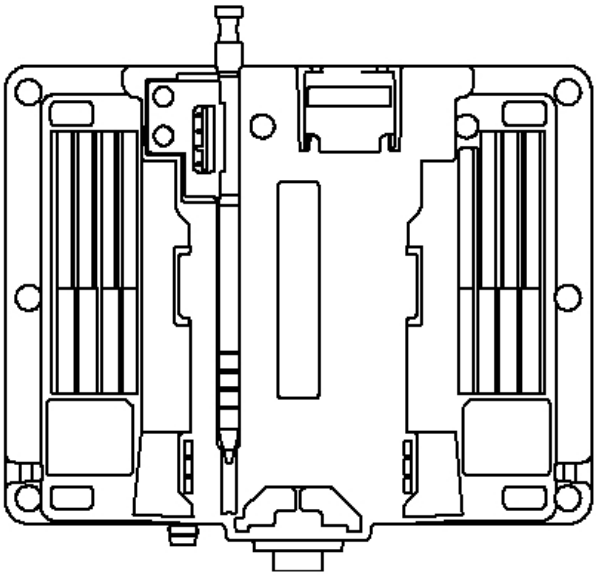

L Type Ethernet/Monitor Cable

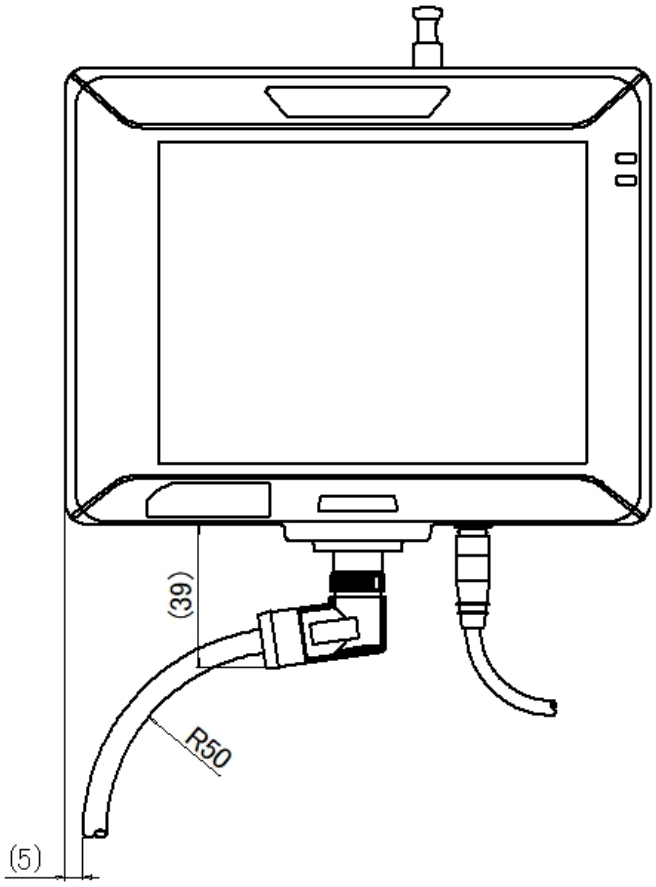

Using OP-88651/88652/88653

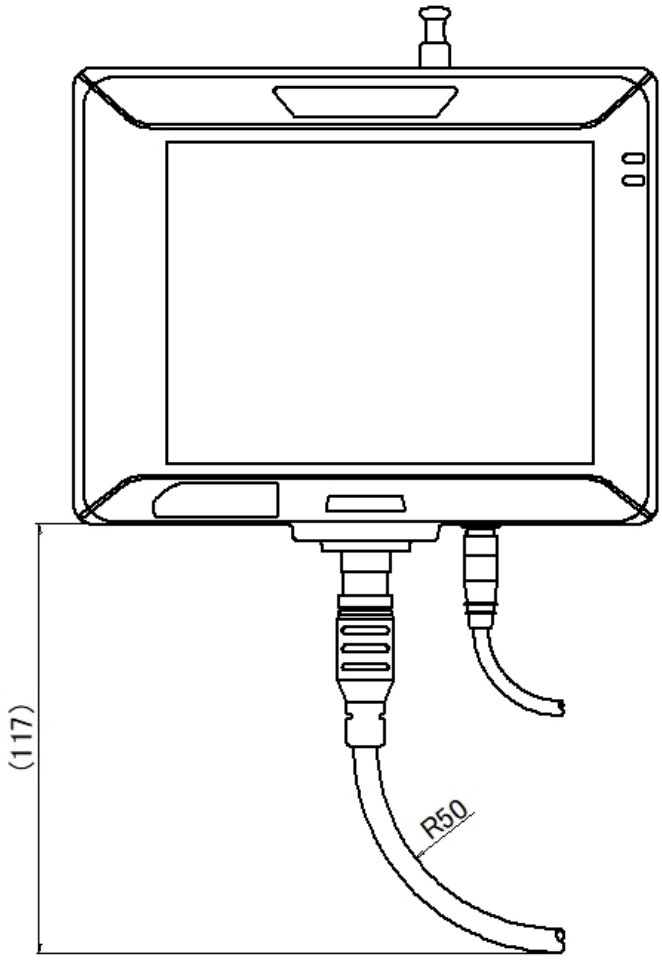

Using the wall mounting adapter

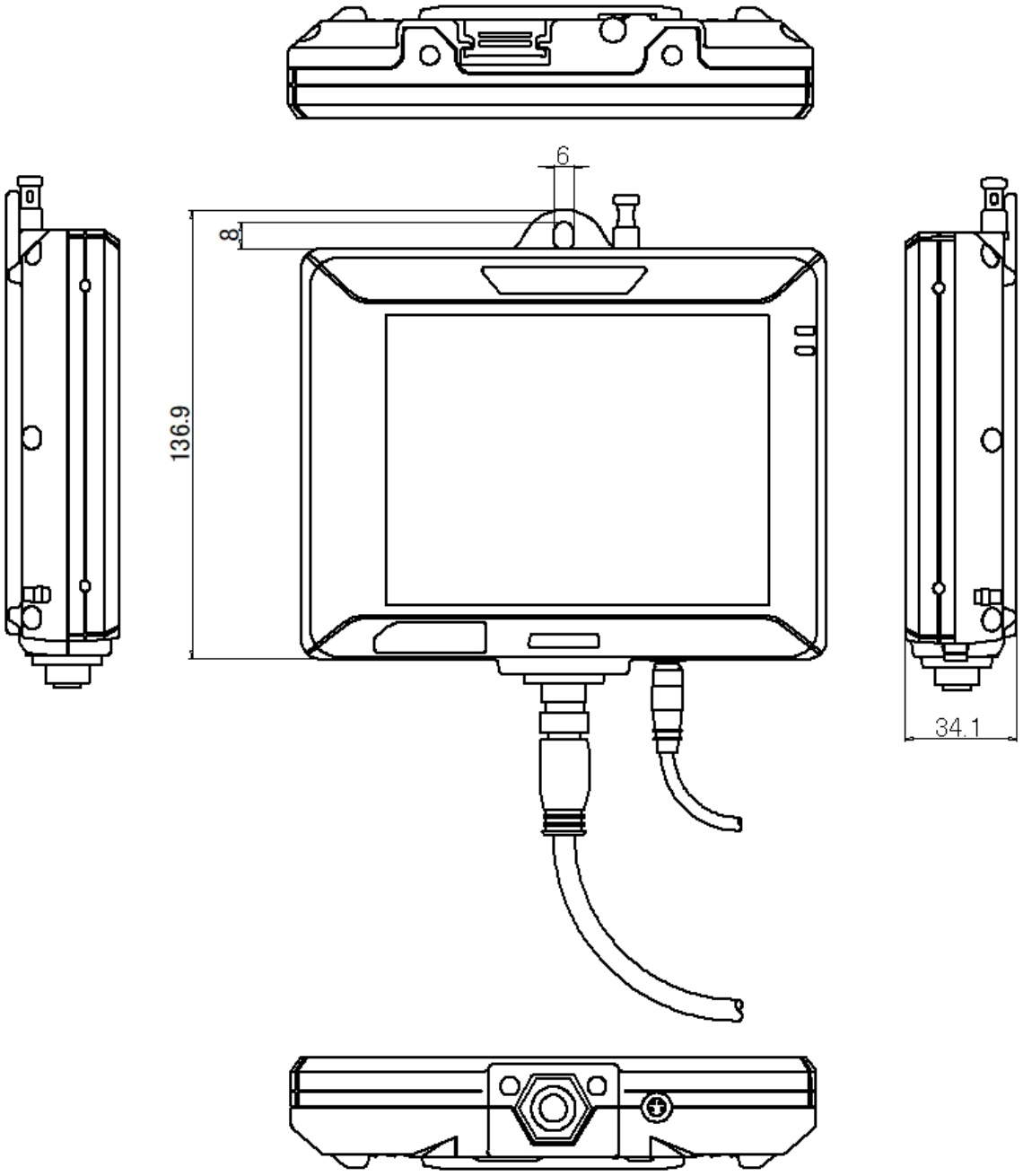

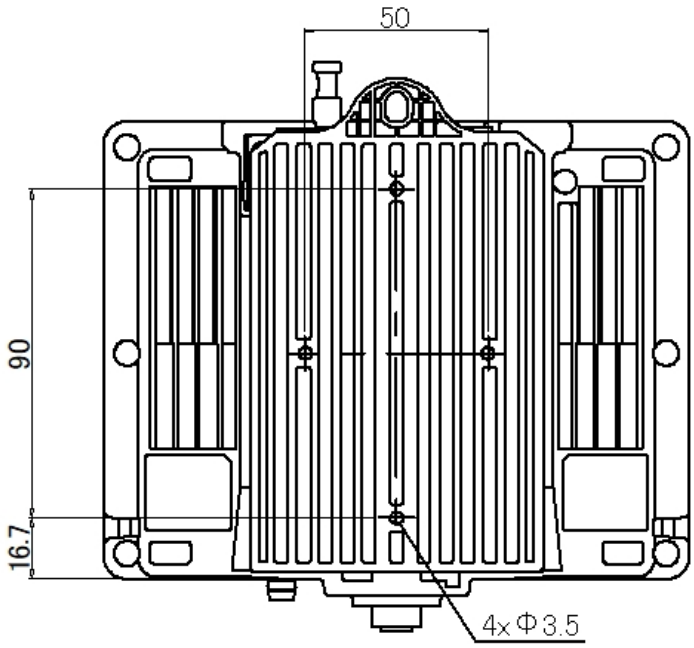

Mounting holes

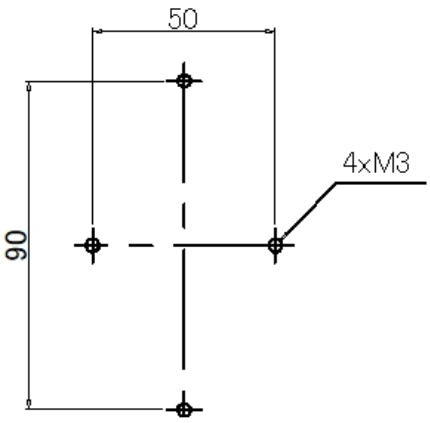

Using the panel mounting adapter

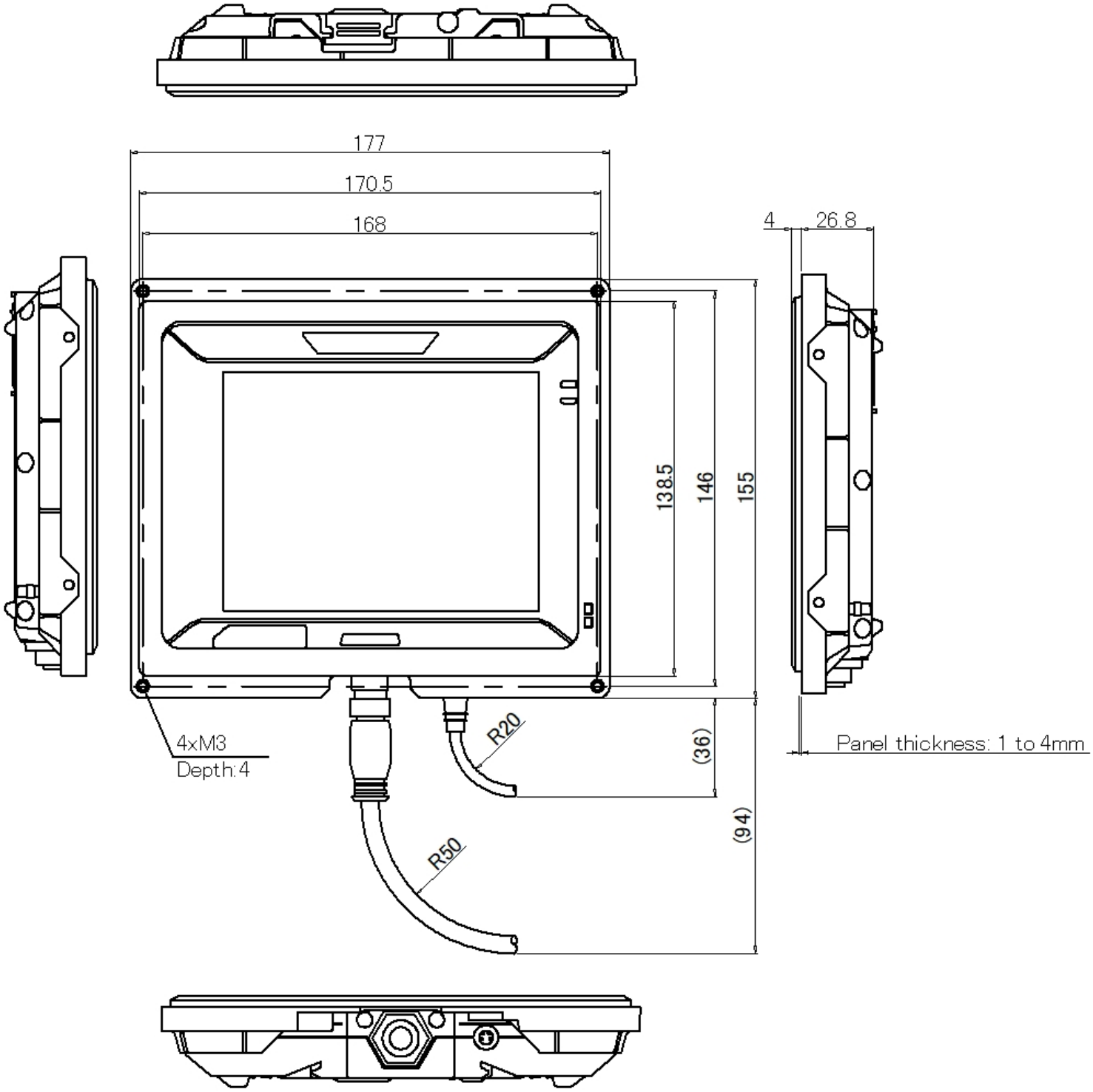

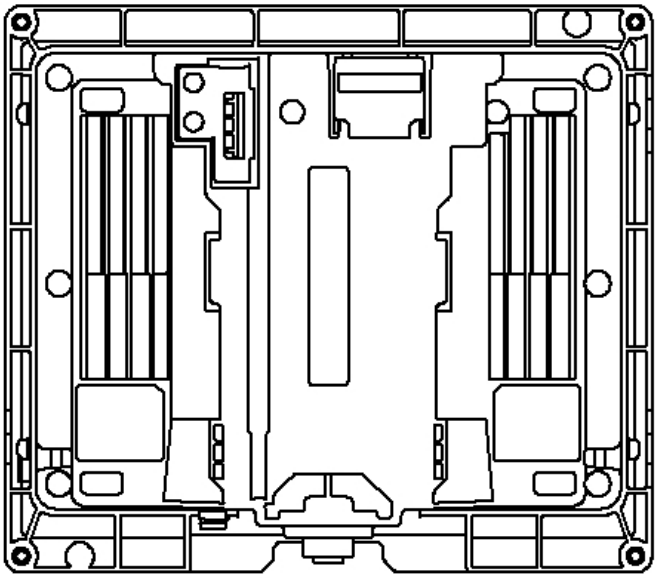

Panel cutout

